Utility-Scale Battery Energy Storage

A Technologically Proven, Cost Competitive Solution That Can Solve Multiple Grid Problems

HECO Grid Planning Symposium

November 16, 2017

AES Energy Storage

Advancion Energy Storage

About the AES Corporation:

Mission: Improving lives by providing safe, reliable and sustainable energy solutions in every market we serve.

5 MARKET-FACING STRATEGIC BUSINESS UNITS

4 CONTINENTS

17 COUNTRIES

$36B
TOTAL ASSETS
OWNED & MANAGED

$14B
TOTAL 2016
REVENUES

36,000 MW
GENERATION CAPACITY

AES Serves
9M
CUSTOMERS

7
UTILITY
COMPANIES

19,000
GLOBAL
WORKFORCE

AES Energy Storage

AES Energy Storage - The global leader in grid-scale energy storage





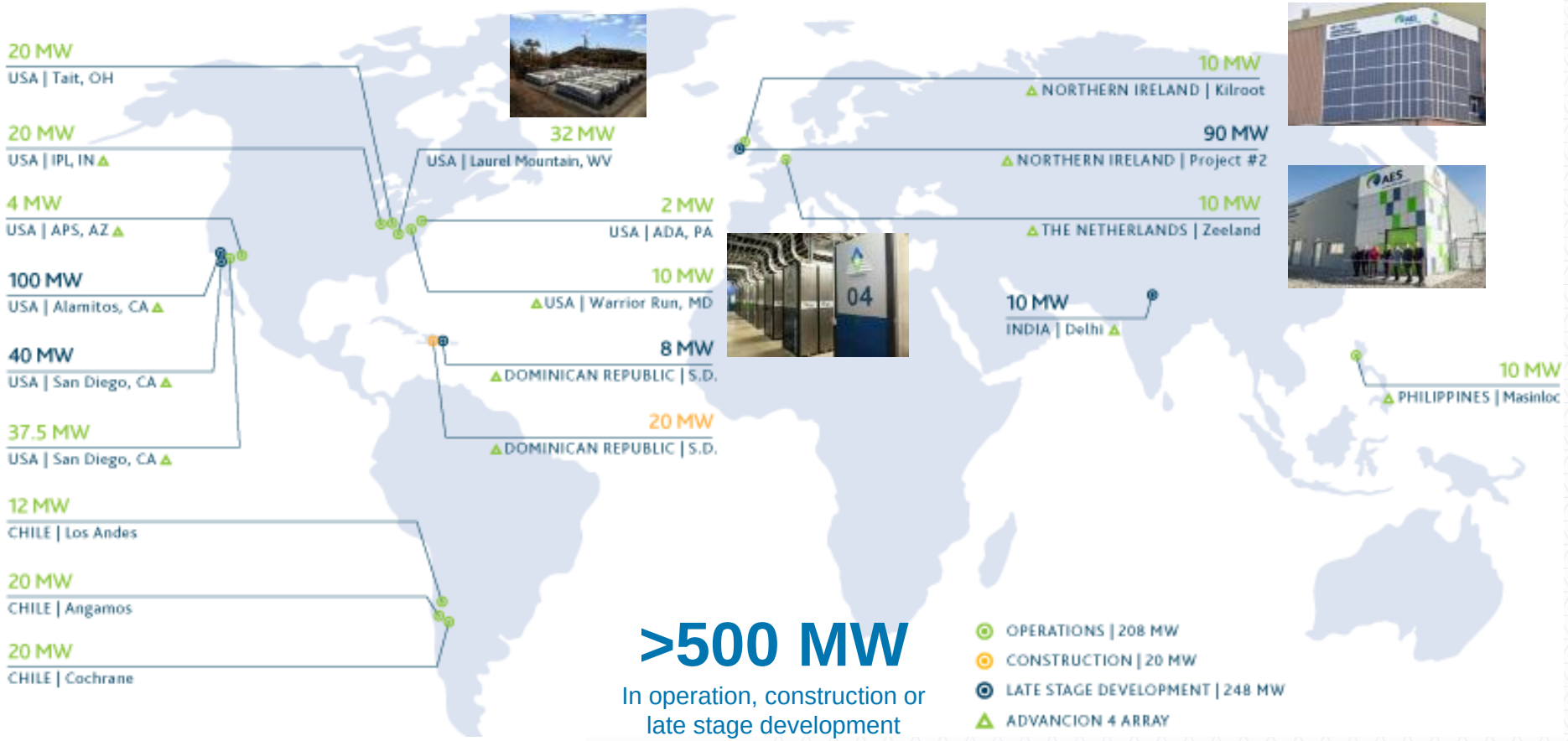

>500 MW

In operation, construction or late stage development

>4 Million MWhs of reliable service

AES Energy Storage

AES Energy Storage - Celebrating 10 years of operating experience delivering safe, reliable utility-scale energy storage solutions

>500 MW
In operation, construction or late stage development


Los Andes

Teck


Angamos

SONI

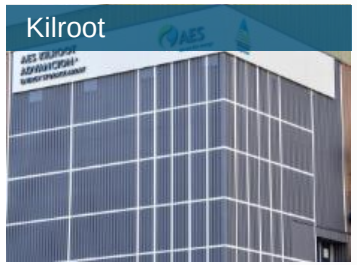
Kilroot

TenneT


Netherlands


Masinloc Philippines


SDG&E

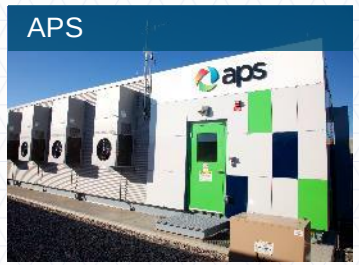
APS

2007 2008 2009 2010 2011 2012 2013 2014 2015 2016 2017

Advancion Energy Storage

Advancion Energy Storage


Carina


Barbados


Laurel Mountain


Tait


Warrior Run


Harding Street


Alamitos

ipl an AES company | pjm | pjm | DP&L | pjm | ipl an AES company | Southern California Edison

2020

To meet the growing demand for energy storage, we just announced a new energy storage joint venture

AES
we are the energy

+

SIEMENS
Ingenuity for life

Coming soon

FLUENCE

A Siemens and AES Company

A new global energy storage technology and services company

Storage Value Proposition on Island Grids

AES Energy Storage

Advancion® Energy Storage

Island markets have certain unique characteristics that set themselves apart

Sparse transmission and limited power generation options make islands unique

Market Attribute	Island Grids	Mainland
Fuel prices	Typically tend to be high (imported fuel in many cases)	Tends to be low due to lower transportation costs and available supply
Power supply stack	Fewer generation units leading to significant gradation in cost	Wide variation of units and interconnected nature brings diversity in supply stack.
Transmission	Usually pretty sparse and not very networked	Highly networked with several redundancies available to meet contingencies
Loss of generation or transmission failure	High system impact due to generation loss or transmission failure	Generally options may be available due to highly networked transmission grid

- Spinning reserves, frequency regulation and transmission system reliability have very high value in island markets.
- Few generation units have to provide these critical ancillary services leading to inefficient operation; in non-island markets, many units take equal responsibility for these services.

Example Case from a Caribbean Island Highlights Frequency-Related Reliability Challenges

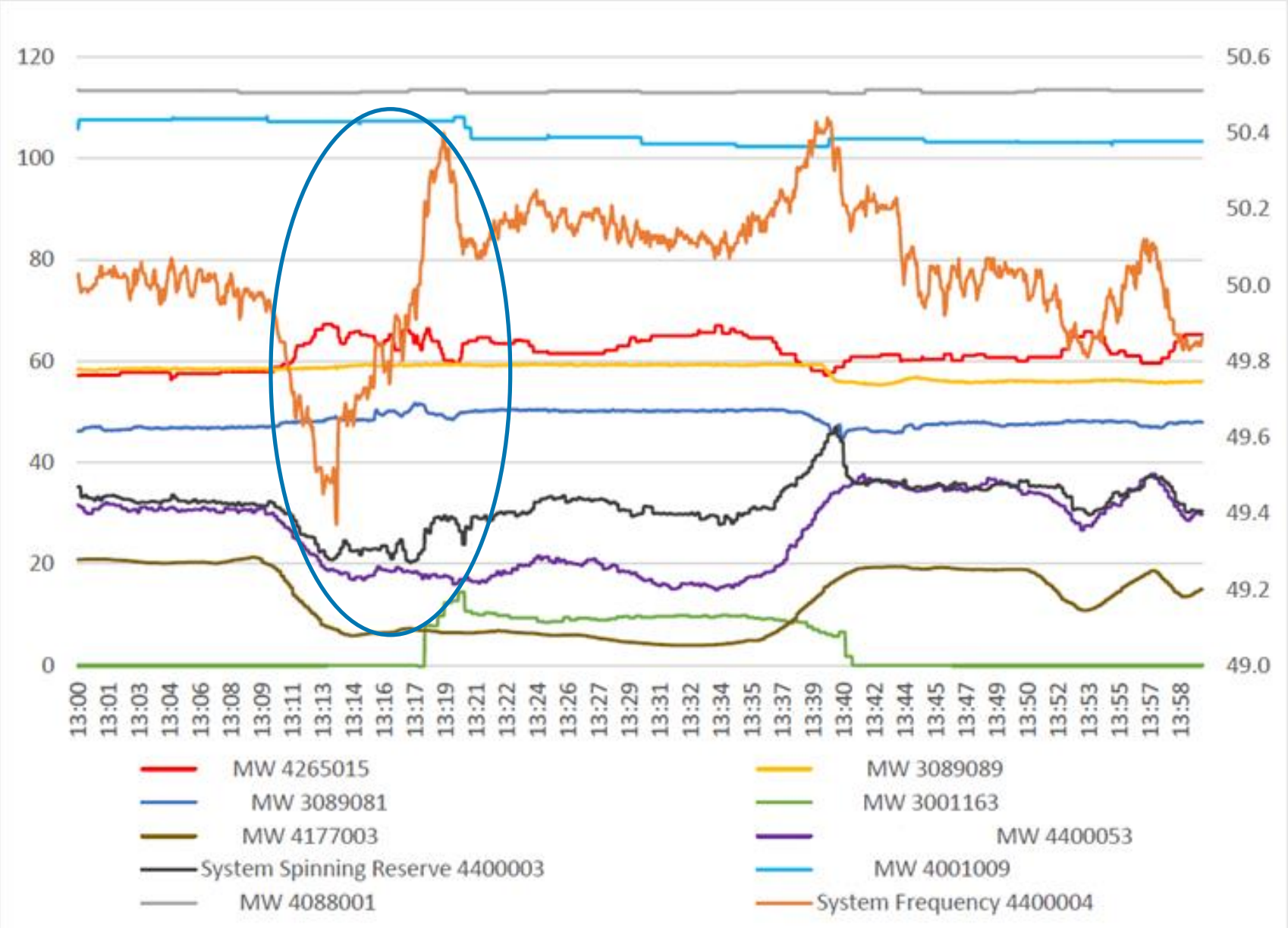

- Dec 5, 2016 event – prolonged loss of 15 MW solar generation in a small Caribbean island for 30 minutes.
- Thermal unit B6 (RED line) attempts to pick up load , but is not able to maintain frequency at 50 Hz.
- GT6 (GREEN line) comes online and leads to over-frequency.
- Ability to control frequency with renewable generation is challenging in small island grids.

Similar Example in Hawaii Indicates Value of Storage in Managing Frequency Deviations

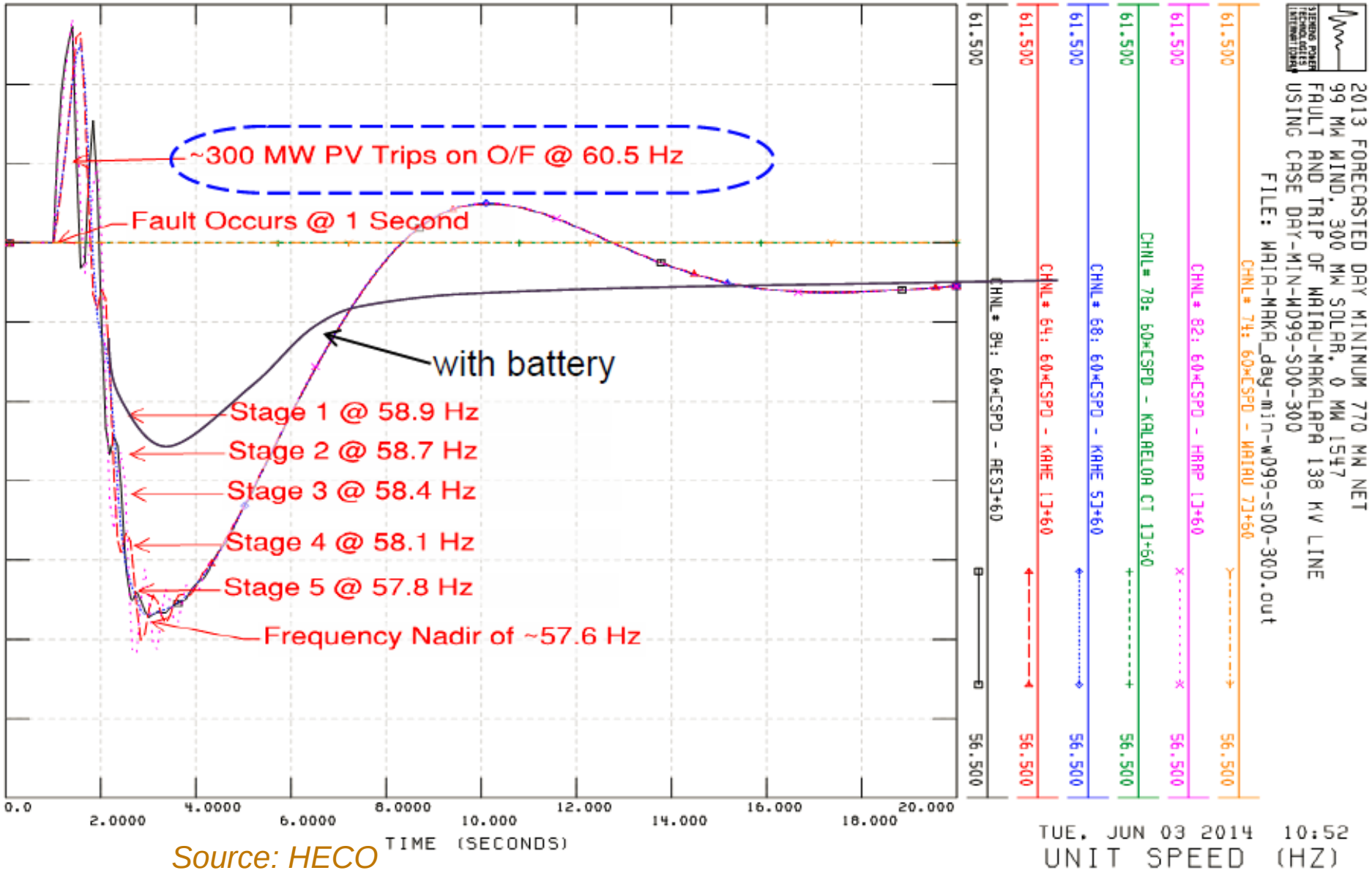

Source: HECO

- Introduction of energy storage helps arrest frequency deviations faster in island markets with renewable generation.

Storage Provides Contingency Response, Frequency Regulation and Other Ancillary Services Freeing Up Traditional Units to Operate Efficiently

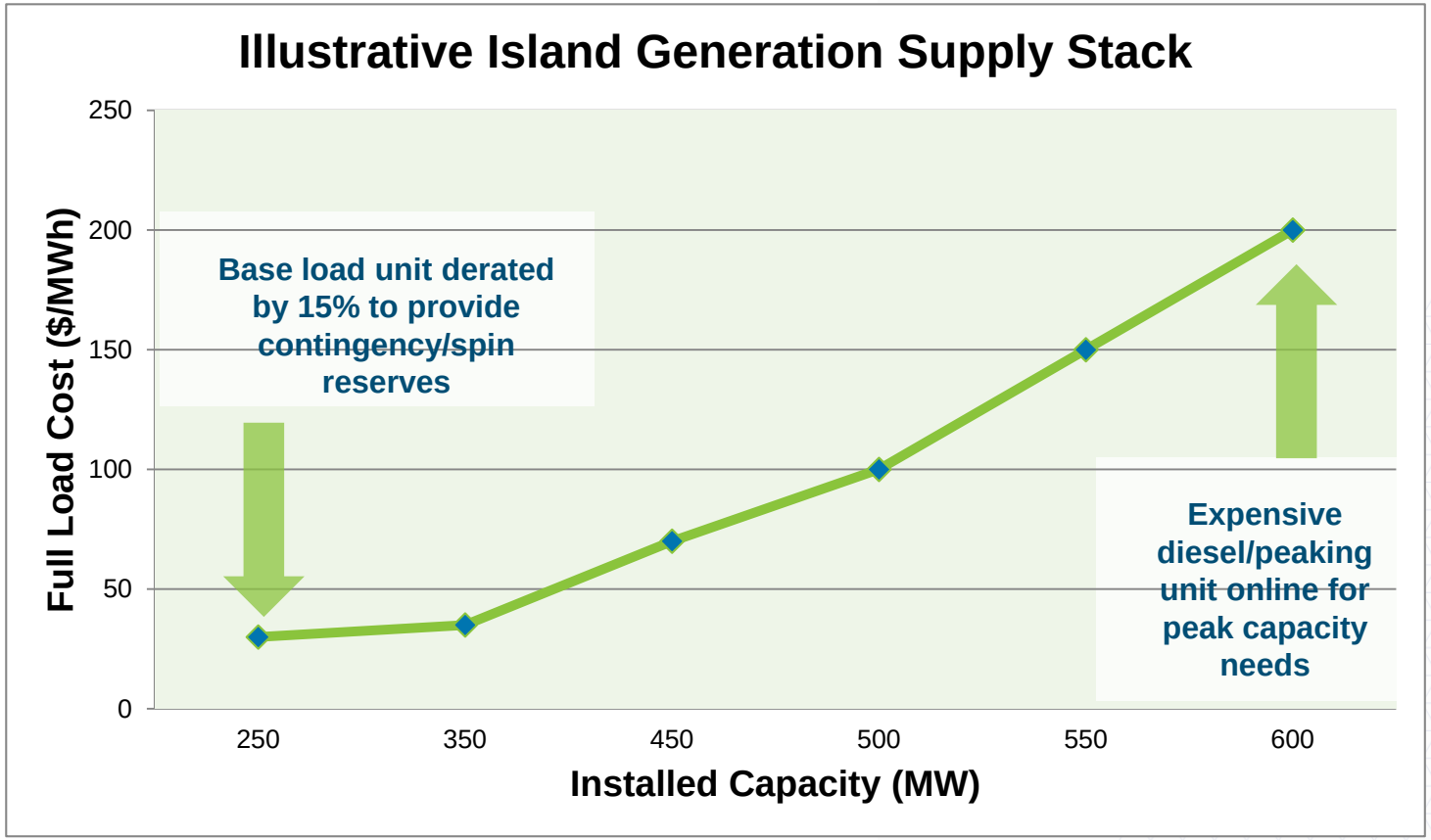

Key Assumptions

- 600 MW Installed capacity in island. Cheapest unit = $30/MWh, Most expensive unit = $200/MWh
- Base load unit holds back 15% capacity (37.5 MW) for contingency/spin reserves.
- 37.5 MW increase in base load unit avoids dispatch of $200/MWh most expensive unit .

Storage Value

- **Storage benefit** = 37.5 MW * $200/MWh * 2,000 hours (typical capacity factor for simple cycle gas turbines) = $15 MM/Year
- **Storage cost** (assuming 1-hour system) = 37.5 MW *$1000/kW = $37.5 MM
- **Simple payback** = less than 3 years

Key questions on storage capacity and duration required for this application have to be addressed in each island market; existing supply stack and resources that currently provide ancillary services are usually enough to develop first-cut storage value proposition.

Longer duration systems provide multiple services, flexibly

Storage can provide multiple services, simultaneously (stacking) or by scheduling

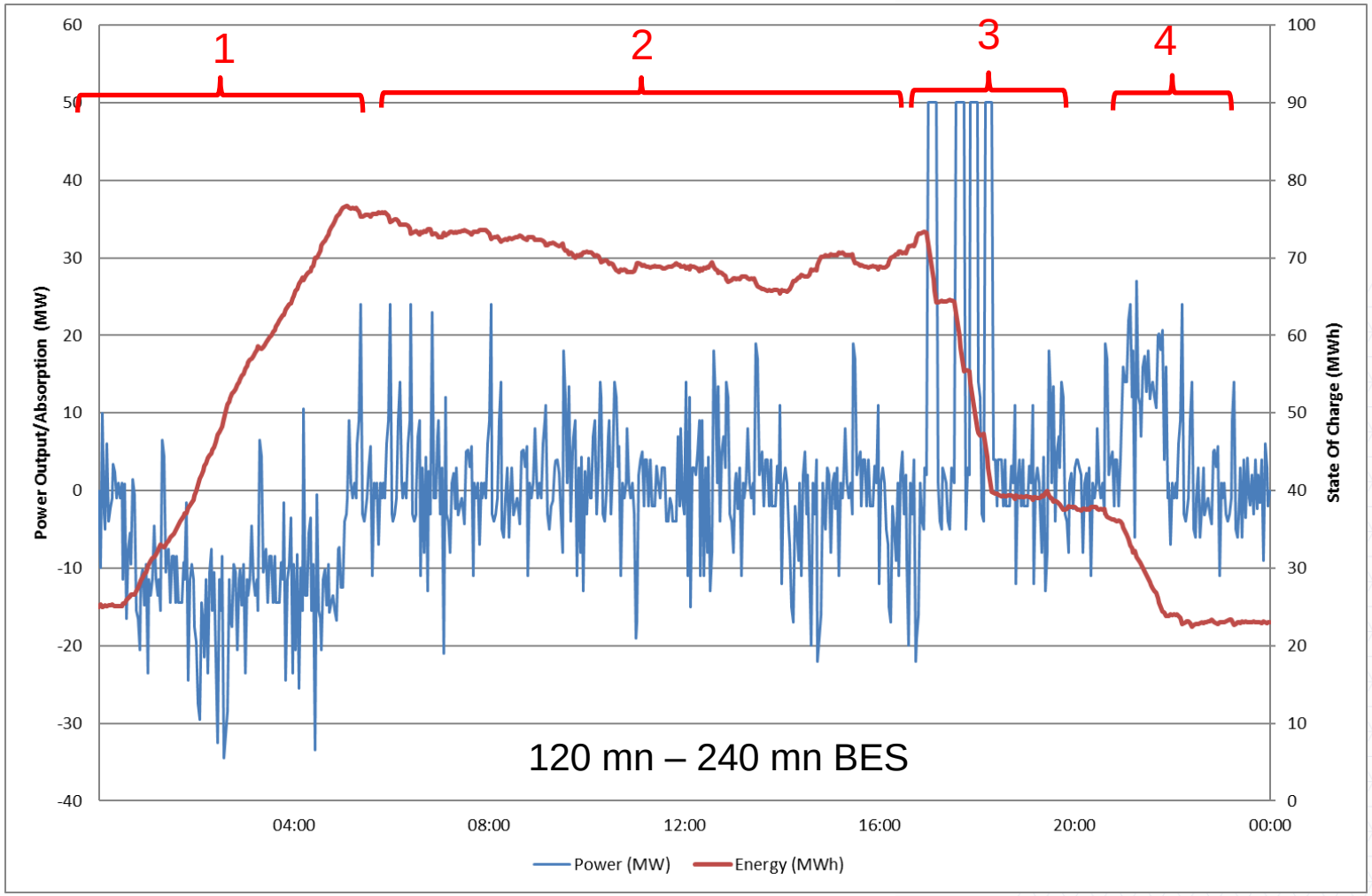

The figure illustrates how storage can **stack** services:

- Period 1: dispatch Negative Reserve (Demand Turn Up) while maintaining 100MW of resource as Response capability
- Period 2: Provide 100MW Response capability
- Period 3: dispatch positive Reserve (Fast Reserve) while maintaining Response capability
- Period 4: maintain its state of Charge adequately to prepare next Day
- All periods: minimum state of charge maintained to provide Black Start if required

AES Advancion® unlocks more value from renewable plants

Three main applications for pairing and co-locating storage with renewables

Grid Stability

- Grid services such as frequency regulation delivered from the renewable plant paired with storage

Renewable Plant Stability

- Smoothing and ramp limiting service to keep renewable output stable

Renewable Firm Energy

- Predictable and firm renewable energy delivery

Renewable Plant Stability

- Types of plant stability cases:
  - Includes cases where the utility requires technical limitations on renewable output (e.g. ramp limits)
  - Curtailment avoidance due to market drivers or interconnection limits

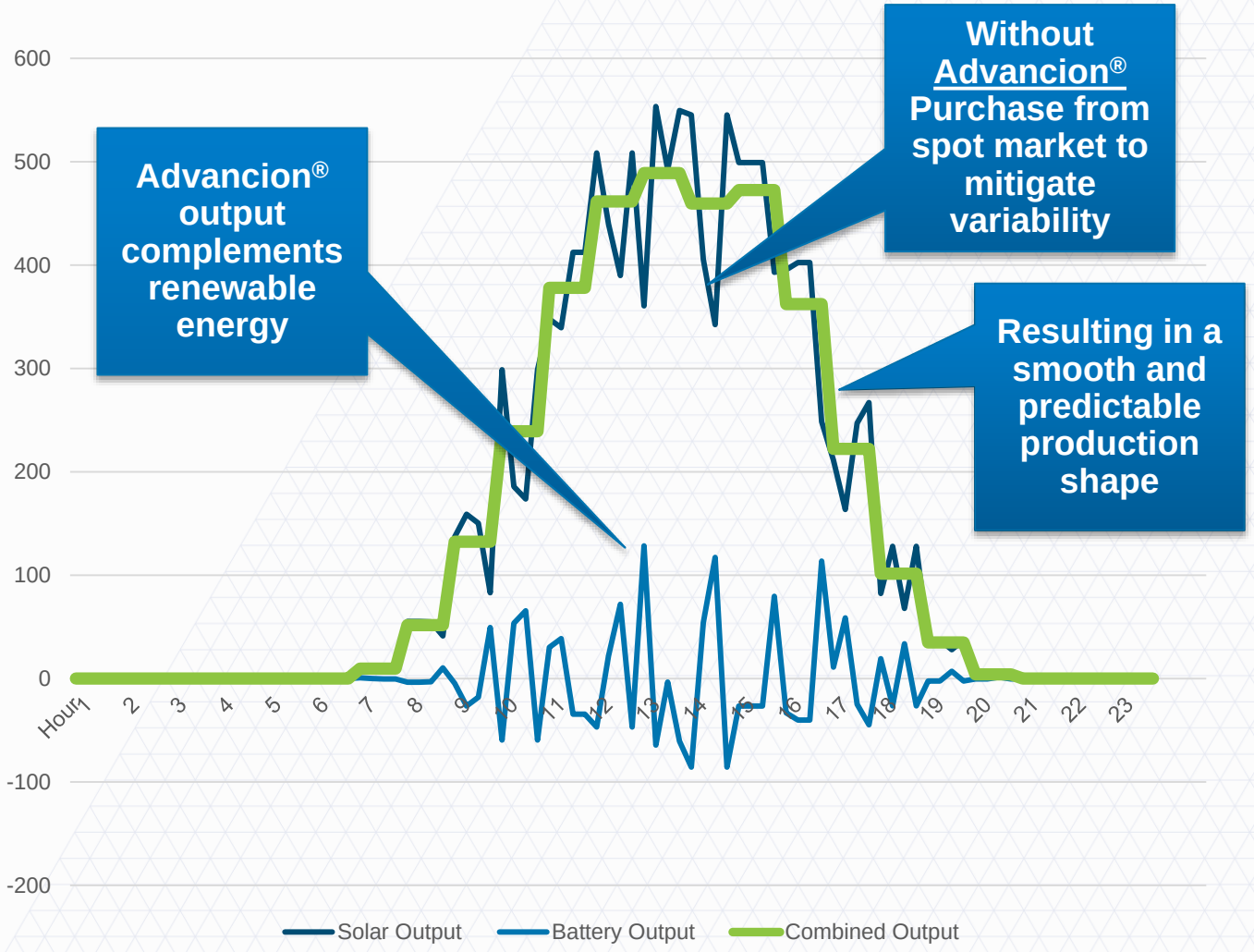

Firm Renewable Energy

Firm Renewable Peaking Capacity

- Motivation for using storage to deliver firm renewable energy is the *rapidly declining cost of fuel – i.e. electricity from renewables*
- As “fuel” and storage costs decline, they will displace traditional alternatives in an expanding set of markets
- KIUC PPA for 11 cents/kWh is already more competitive than alternatives for the window it will deliver energy within

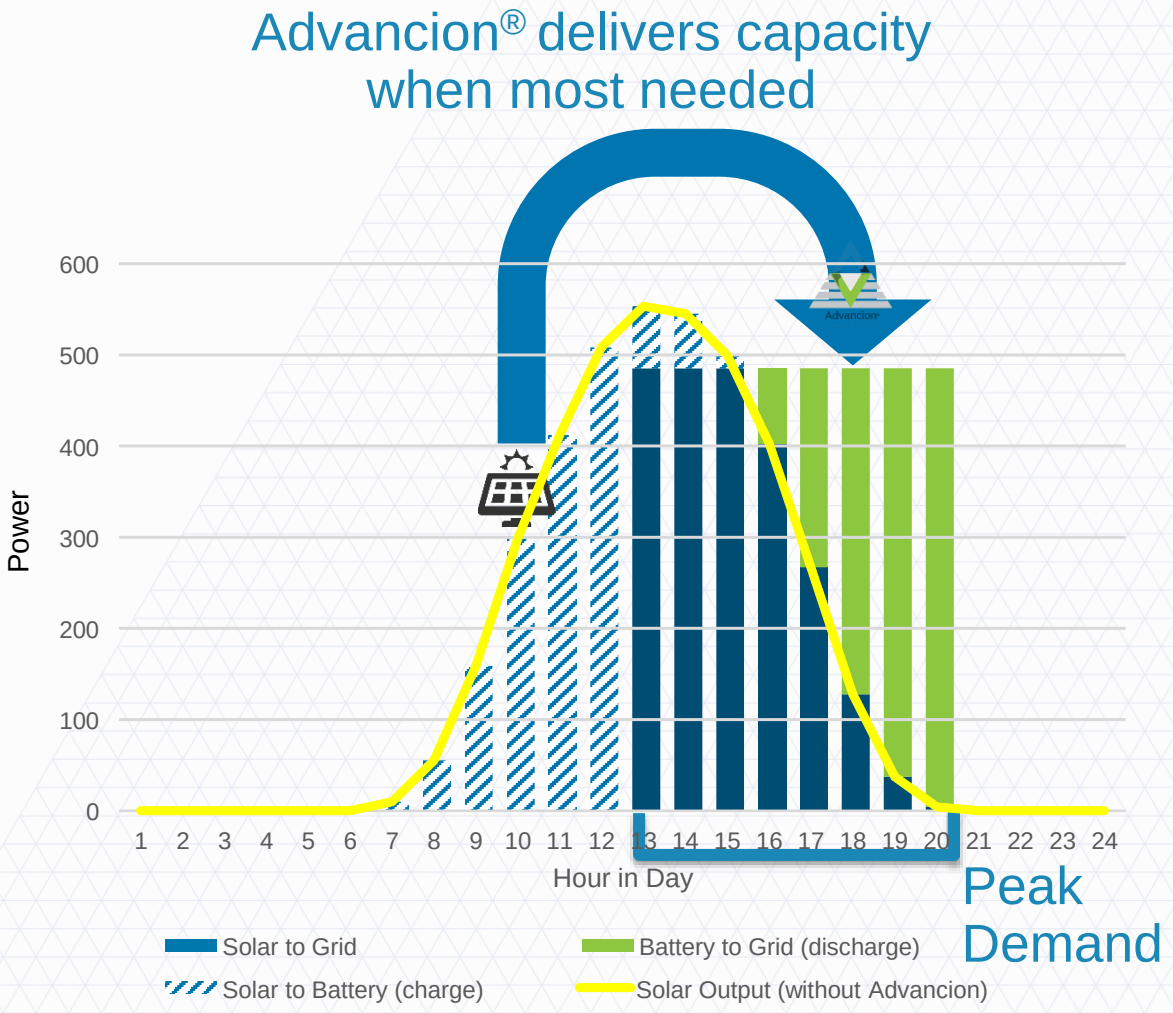

Firm Renewable Energy

Firm Renewable Baseload Capacity

- Using renewable source as fuel, storage can provide firm baseload energy
- Size: Solar PV capacity roughly 3x baseload, storage capacity 2x baseload, duration ~8 hours
- Ideal for large, steady, isolated load scenarios – such as islands and mines

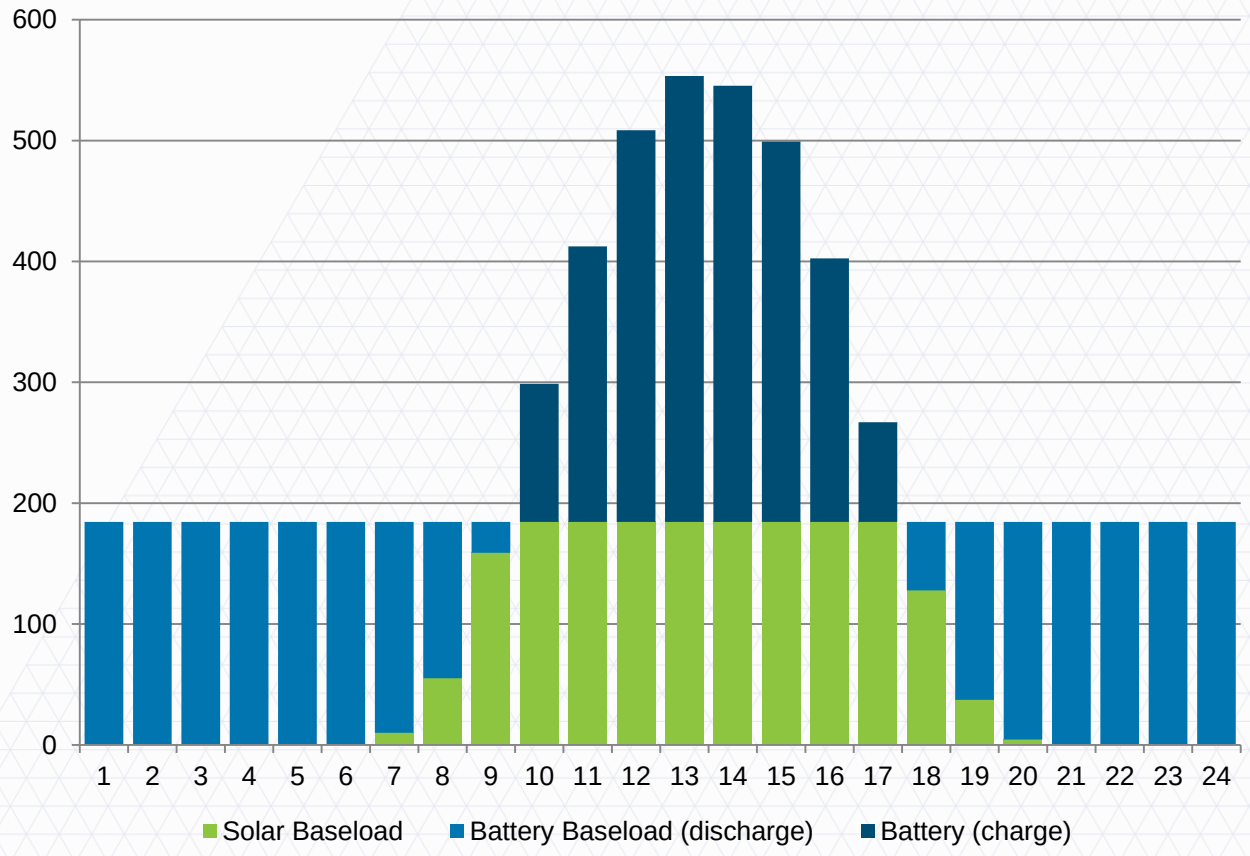

Three T&D value plays for energy storage

1 N-1 Capacity Release

- Automatic power injection to support grid stability during contingency.
- Increase the operational capacity of existing line (value creation from existing assets).
- Arrests line overloads and frequency/voltage deviations until grid is redispatched

2 Peak Load Relief

- Injects power downstream of thermal constraints during peak hours
- Avoids or defers new transmission capex to meet load
- Improves power quality and voltage conservation

3 Feeder reliability

- Supports greater penetration of intermittent distributed resources
- Injects real and reactive power to maintain voltage stability, improve power quality
- Reduces wear and tear on existing equipment
- Defers cost of traditional poles and wires solution

1 Capacity Release - Operational Construct

- Assuming Lines, X, Y and Z are rated at 500 MW capacity, N-1 limit across interface from A to B is 1000 MW.

- To increase throughput across the interface to 1500 MW, consider storage additions at nodes B and E that provide temporary post-contingency relief. These batteries are generally on stand-by – upon sensing a line-trip (through frequency or direct line flow input feed) they ramp to full output to provide counter-flows.

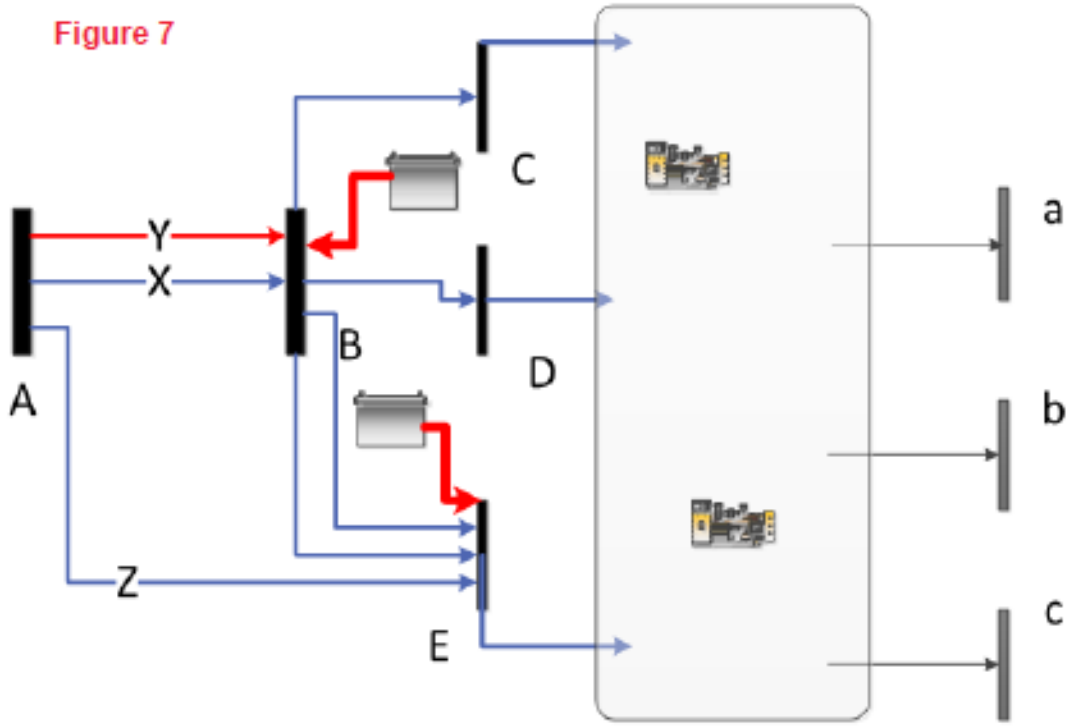

2 Peak Load Relief – Operational Construct

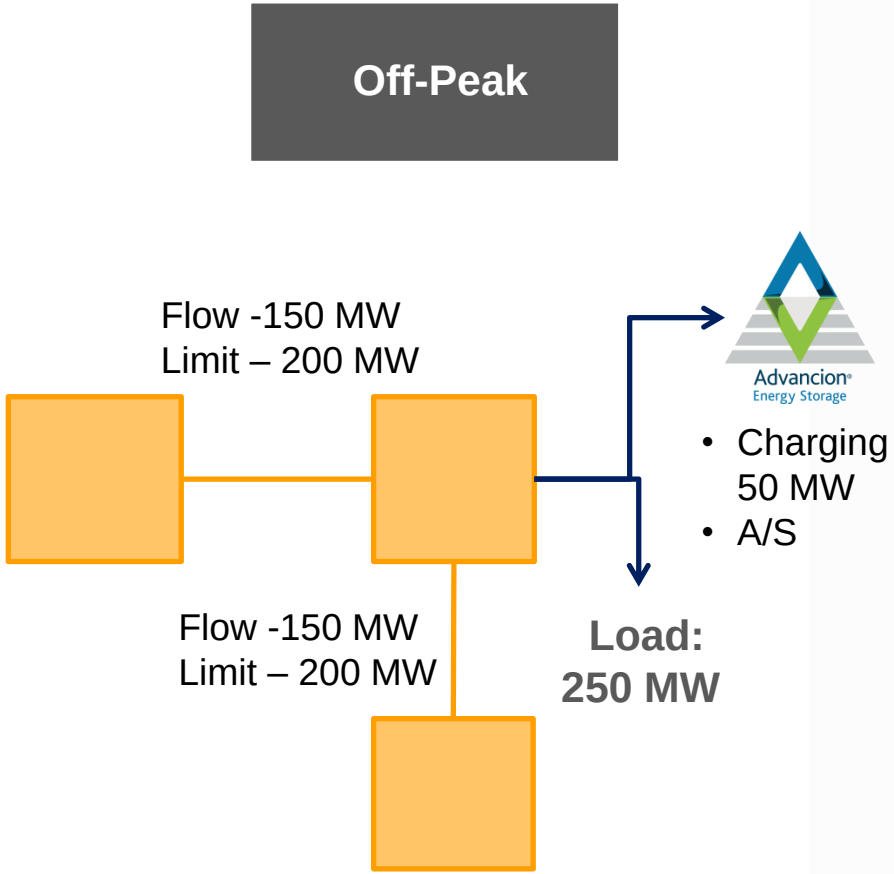

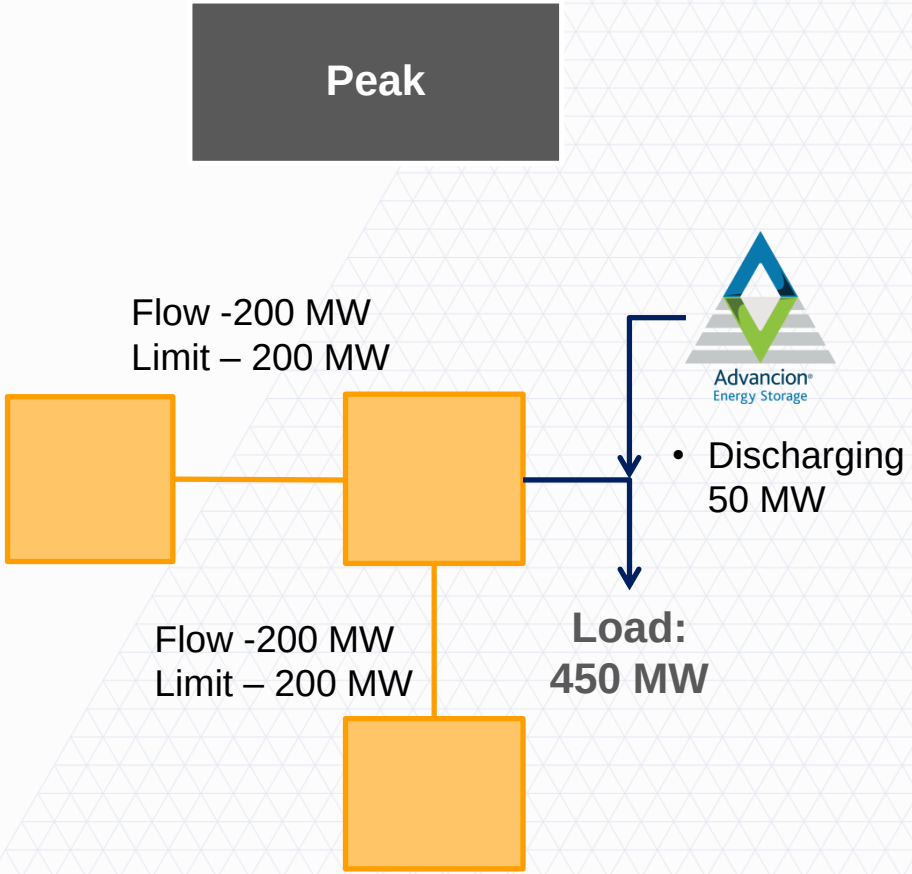

3 Feeder Reliability – Adoption of Storage in Distribution Networks

Battery nodes help address voltage issues and enable penetration of distributed solar PV

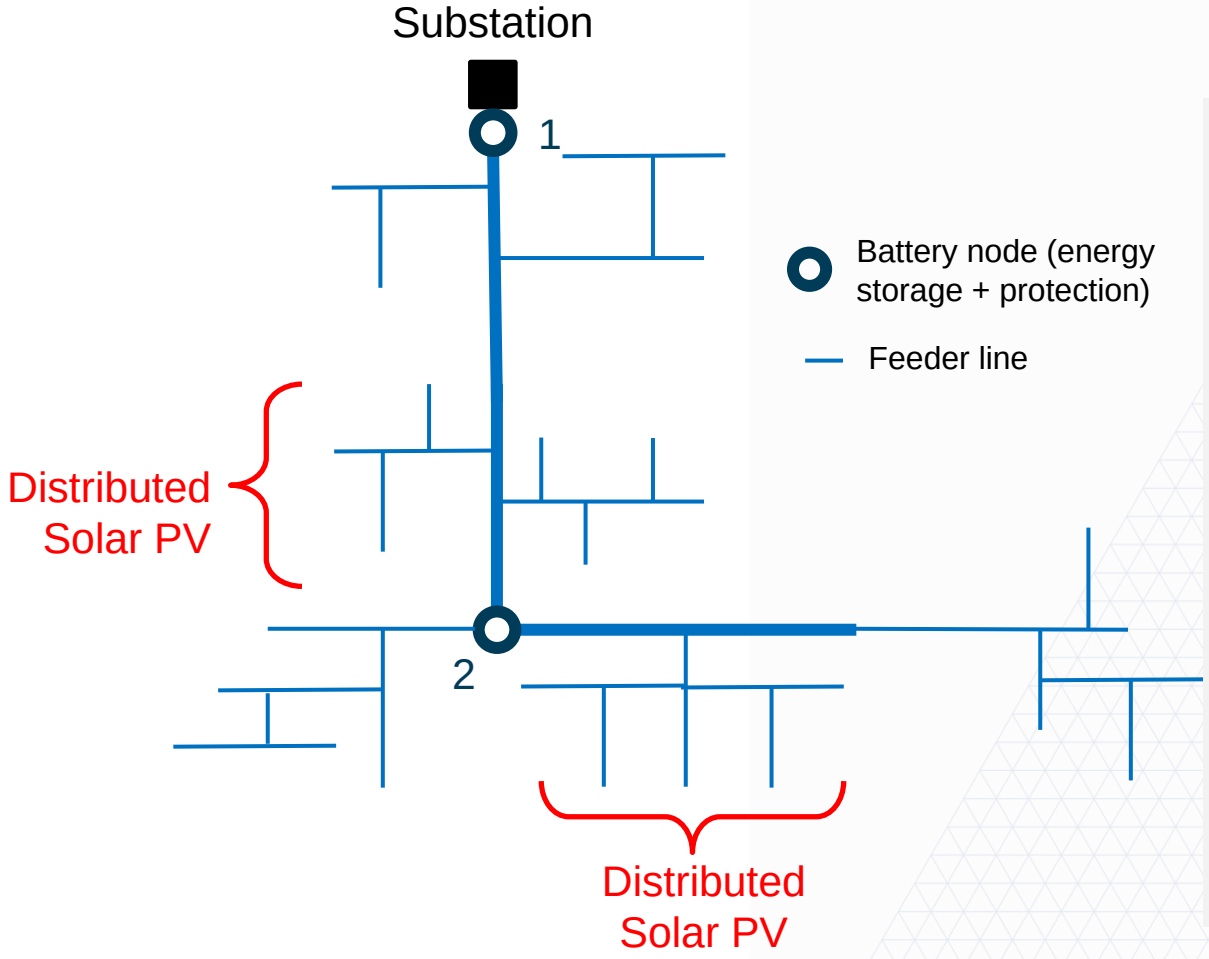

Rationale

- Significant increase in distributed solar PV on feeders causes “voltage stiffness” in feeders.
- In some cases, this can restrict the amount of solar that can be integrated at the feeder level.
- Appropriately positioned storage systems (~1-2 MW scale) can help address voltage issues and also provide additional benefits like Volt/Var control to the feeder.

AES Project Examples On Island Grids

AES Energy Storage

Advancion® Energy Storage

Storage in Islands

Dominican Republic

SERVICES

- Capacity release for generation facility
- Ancillary services

AES Energy Storage

10 MW Energy Storage Array
Santo Domingo, DR

Storage in Islands

The Philippines

SERVICES

- Frequency regulation
- Ancillary services to the grid

AES Energy Storage

10 MW Energy Storage Array
Zambales Philippines

Frequency Control

Energy storage for critical spinning reserves, replacing oil & standby

SERVICES

- Primary & secondary reserves
- Contingency management

IMPACT

- ✓ Avoided load shedding
- ✓ Increased energy & reduced costs
- ✓ Inertia-like performance

12 MW Energy Storage Array
Los Andes, Atacama, Chile

AES Energy Storage

Renewable Integration

Solving peak energy demand through solar + storage in Hawaii

BRIEF

Hawaii co-op signs deal for solar+storage project at 11¢/kWh

AES Energy Storage

Thank you!

Charles Vaughan

Vice President, Business Development – U.S. & Canada

Email: charles.vaughan@aes.com

AES Energy Storage

Advancion® Energy Storage