February 1, 2021

The Honorable Chair and Members
of the Hawai‘i Public Utilities Commission
Kekuanao‘a Building, First Floor
465 South King Street
Honolulu, Hawai‘i 96813

Dear Commissioners:

Subject: Docket No. 2018-0163
Instituting a Proceeding to Investigate Establishment of
a Microgrid Services Tariff
Transmittal of a Draft Microgrid Services Tariff

Pursuant to the Commission Guidance, filed on December 10, 2020, in the above subject proceeding[1] ("Commission Guidance"), as amended by the Commission letter dated January 22, 2021,[2] the Microgrid Tariff Working Group[3] herein provides a Working Group status update.

Working Group Status

Upon receipt of Commission Guidance, the Working Group reinitiated activities and convened six virtual meetings to plan, prioritize, and address the items identified in the Commission Guidance.[4] During this time, the Working Group progressed on a number of items, the agreements of which are reflected in the redlined documents provided herein as Attachment 1 and 2. Attachment 1 shows the agreed upon edits to the Company's draft Microgrid Services Tariff. Attachment 2 redlines the agreed upon edits to Appendix II Microgrid Services Tariff - Hybrid Microgrid Agreement. The agreed upon edits in both documents are the result of the Working Group's discussions as well as the Commission Guidance.

Sections flagged for either additional clarification, potential proposals by one or more Parties, or additional discussion are listed below (see Open Items) and highlighted in Attachments 1

[1] Letter dated December 10, 2020 from the State of Hawaii Public Utilities Commission, Commission Guidance, In re Public Utilities Commission, Docket No. 2018-0163 – Instituting a Proceeding to Investigate Establishment of a Microgrid Services Tariff.
[2] Letter dated January 22, 2021 from the State of Hawaii Public Utilities Commission, Letter Request to Modify Deadlines, In re Public Utilities Commission, Docket No. 2018-0163 – Instituting a Proceeding to Investigate Establishment of a Microgrid Services Tariff.
[3] Division of Consumer Advocacy, Distributed Energy Resources Council of Hawaii, Energy Island, Microgrid Resources Coalition, and Ulupono Initiative ("Microgrid Tariff Working Group" or "Working Group" or "Parties").
[4] Hawaiian Electric, MRC, Ulupono, and the Consumer Advocate have been participating in the working group discussions since the Commission's Guidance.

and 2. Based on the updated and approved procedural schedule,[5] Parties will file areas of disagreement and associated revisions to the red-lines of the Microgrid Tariff and other related documents by February 10, 2021.

The Working Group's Presentations and Meeting Minutes for the aforementioned meetings are enclosed as Attachment 4.

Commission Guidance – Recommended Actions

The Commission provided the following 11 recommended actions to address within the requested timeframe. A status update to each action item is provided below.

1. **Customer Microgrid Interconnection Agreement**
   - No action taken.
2. **Definition of the Customer (Tariff Sections A.1.g and E.1.a)**
   - No further action required. Revisions to Tariff section E.1.a were discussed and accepted by the Working Group.
3. **Applicability of Other Tariffs (Tariff Section B.3)**
   - Further action required. Revisions to Tariff section B.3 and B.4 (as shown in Attachment 1) were approved by the Working Group. Further discussion in the Working Group meetings resolved MRC's concern regarding Rule 15; however, additional edits may be proposed by MRC.
4. **Indemnification (Tariff Sections C.1-2)**
   - Further action required. Revisions to Tariff section C.2-4 were discussed and accepted by the Working Group. Additional edits to Tariff section C.1-2 may be proposed by MRC.
5. **Data Set Satisfaction Prior to Conducting the Feasibility Study (Tariff Section D.3.b)**
   - No further action required. The Company edited and clarified the information requested in Appendix II (Hybrid Microgrid Agreement), Exhibit A (Description of Hybrid Microgrid). A reference to this Exhibit was made in Tariff section D.3.b).
6. **Hybrid Microgrid Compensation (Tariff Section E.2)**
   - Further action required. At the Commission's request, the Working Group discussed alternative compensation models for hybrid microgrids. MRC and Ulupono presented two models, "Community Solar Model" and "Customer

[5] Letter dated January 22, 2021 from Ashley K. L. Agcaoili, State of Hawaii Public Utilities Commission, Re: Parties' January 21, 2021 Letter Request to Modify Deadlines, In re Public Utilities Commission, Docket No. 2018-0163 – Instituting a Proceeding to Investigate Establishment of a Microgrid Services Tariff.

Microgrid Model".[6] The Working Group agreed adding one or both models would require additional discussion. A revision to Tariff section E.3 was approved by the Working Group.

7. **Hybrid Microgrid Applications Interconnection Queue (Tariff Section G)**
   - No action taken.
8. **Project Caps, Program Caps, and Rated Power (Tariff Sections D.2, I.2, and H.3.a.i)**
   - Further action required.
   - The Working Group agreed that a 3MW limit is acceptable for a Hybrid Microgrid applicant using a form agreement (i.e., Appendix II), and larger Hybrid Microgrids may be better addressed with one on one negotiations such as is done for PPA-type agreements due to the complexity of larger Hybrid Microgrids. The Company clarified its reasoning for inclusion of a 3MW project cap for Oahu, and with further discussion with the Working Group, revised the Hybrid Microgrid project cap to 3MW of Total Peak Load (as opposed to Total Rated Capacity). Revisions to Appendix II (pg. 1) and Exhibit G were made to reflect this change.
   - Issues with the proposed Tariff Program Cap were not raised by the Working Group. A Working Group edit was provided to clarify the use of Rated Power in Tariff section H.3.a.i.
9. **Anti-Islanding Provisions (Tariff Section H.3 paragraph 4)**
   - No further action required. A Working Group edit to Tariff section H.3 paragraph 4 was provided for clarification.
10. **Draft Hybrid Microgrid Operator Interconnection Agreement**
    - Further action required.
    - Attachment 2 represents the proposed edits accepted by the Working Group and highlights areas requiring further clarification, potential proposals by one or more Parties, or further discussion. Attachment 2 was renamed Microgrid Services Tariff - Hybrid Microgrid Agreement to better reflect the scope of the agreement.
    - Attachment 3 (Disclosure Checklist) was revised to better group the checklist items and summarize the requested information. Further action required to reach consensus on the disclosure checklist.
11. **Draft Modifications to Rule 24 and Other DER Programs for Customer and Hybrid Microgrids**
    - No further action required. The proposed modification to the DER Tariff Rules was discussed and provided to the Working Group for review. Attachments 5

[6] See January 11, 2021 Working Group presentation (slides 11-12). https://www.hawaiianelectric.com/documents/about_us/our_vision_and_commitment/resilience/microgrid_services_tariff/20210111_microgrid_services_tariff_working_group_webinar_presentation.pdf

through 7 provide the proposed modifications to the existing DER Tariff Rule Nos. 14H, 18, and 22 through 27 for O‘ahu, Maui County and Hawai‘i Island respectively.

Open Items:[7]

The highlighted portions of Attachments 1 and 2 reflect areas where additional clarification, potential proposals, or additional discussion will be provided by one or more of the Parties. Open items are listed below. These are in addition to the Disclosure Checklist.

1. **Microgrid Services Tariff (Attachment 1 hereto)**
   a. Sec. B.4: Availability
   b. Sec. C.1 & C.2: Responsibilities Among the Parties
   c. Sec. D.2: Interconnection
   d. Sec. E: Billing and Compensation
2. **Appendix II Hybrid Microgrid Agreement (Attachment 2 hereto)**
   a. Section 1: Notice and Disclaimer Regarding Future Rate and Tariff Modifications
   b. Section 2: Term and Termination
   c. Section 13.b.i: Limitation of Liability: Indemnification
   d. Section 22.c & 22.f: Microgrid Services Tariff
   e. Exhibit B, Sec. 2.l.iii: Information Security Requirements – Security Breach
   f. Exhibit C, Sec. 2: Microgrid Operator Payment for Company Interconnection Facilities
   g.

Sincerely,

/s/ Marcey Chang
MARCEY CHANG
Co-Chair

/s/ Ken Aramaki
KEN ARAMAKI
Co-Chair

/s/ Marc Asano
MARC ASANO
Co-Chair

Attachments
c: Service List (via email)

[7] One or more of the Parties’ may address the following sections.

RULE NO. XX

Microgrid Services

A. GENERAL

The Microgrid Services Tariff is intended to encourage and facilitate the development and use of new microgrids throughout Hawai‘i, except Kauai, to improve energy resiliency, in light of extreme weather events or other disasters as identified in Act 200 of the 2018 Legislative Session. The Microgrid Service Tariff is not intended to affect existing microgrids and other facilities with microgrid capabilities (e.g., Distributed Generation Faciities, generators), which are interconnected to the Company System by means of a Customer Interconnection Agreement or other agreements with the Company, subject to the terms and conditions set forth in the Company’s Rule 14, Section H (“Rule 14H”) and other applicable Company rules, at the time of the initial effective date of this tariff, [insert date].

This Tariff shall be reviewed no later than five years from the effective date.

1. Definitions

   a. “AC” means alternating current.

   b. “Applicant” means the Microgrid Operator applying under the Microgrid Services Tariff.

   c. “Application” or “Hybrid Microgrid Application” means the form by which the Applicant provides a description of the planned Hybrid Microgrid and applies to the Company to be a Hybrid Microgrid Operator.

   d. “Commission” means the Public Utilities Commisson of the State of Hawai‘i.

   e. “Company” means [Hawaiian Electric Company, Inc., Maui Electric Company, Ltd., Hawaii Electric Light Company, Inc.].

   f. “Company System” means all electrical wires, equipment and other facilities owned or provided by the Company, through which the Company provides electrical service to its Customers.

   g. “Customer” or “Customers” used herein is as defined in Company Rule No. 1.

   h. “Customer Interconnection Agreement” means the applicable interconnection agreement for a non-utility Generating Facility.

i. "Customer Microgrid" is a Microgrid that uses non-utility infrastructure on the customer side of~~beyond~~ the Point of Common Coupling[1] (PCC), including distribution lines and related equipment, to meet its interconnected loads.

j. "Disclosure Checklist" means the Hybrid Microgrid Operator Disclosure Checklist attached hereto as, Appendix I.

k. "Distributed Generation Facility" is as defined in Rule No. 14.

l. "Distribution Level" is defined as Interconnection to electrical wires, equipment, and other facilities at the distribution voltage levels (such as 25kV (Oahu only), 12kV, or 4kV) owned or provided by the Company, through which the Company provides electrical service to its Customers.

m. "Emergency Events" means emergency conditions and pre-emergency conditions as specified in footnotes 5 and 7 in Rule No. 14H Appendix I.

n. "Generating Facility" means Customer or utility-owned electrical power generation or electric power generation that is included in a microgrid and is under the operating control of the Microgrid Operator and ~~that, in either case,~~ is Interconnected to the Company System.

o. "Grid-Connected Mode" means a mode of operation when the Microgrid is Interconnected to and operating in parallel with the Company System, is not operating in Island Mode, and the Company maintains operational coordination of the delivery of electric service to the Point of Common Coupling~~.~~.

p. "Hybrid Microgrid" is a Microgrid that uses utility and non-utility infrastructure on the ~~customer~~Microgrid's side of~~beyond~~ the PCC, including distribution lines, Generating Facilities, and related equipment, to meet its interconnected loads.

q. "Hybrid Microgrid Agreement" means the Hybrid Microgrid Agreement attached hereto as, Appendix II.

~~q.~~r. "Hybrid Microgrid Facility" means the facilities and equipment needed to create and operate a Hybrid Microgrid, including the generation, breakers, protective and associated equipment, improvements, and other tangible assets, contract rights, easements, rights of way, surface use agreements and other interests or rights in real estate reasonably necessary for the construction, operation, and maintenance of the Hybrid Microgrid subject to this Tariff.

~~r.~~s. "Interconnect" or "Interconnected" or "Interconnection" means the physical connection(s) between the utility electric grid (i.e., the Company System) and the Microgrid at a designated PCC.

[1] For Customer Microgrids, there may be instances where the Point of Common Coupling (e.g., utility meter) is located on the low side of Customer electrical equipment.

~~s. "Interconnection Agreement" means the Hybrid Microgrid Interconnection Agreement attached hereto as, Appendix II.~~

t. "Interconnection Requirements Study" or "IRS" means pursuant to Rule 14H, Appendix III, Section 4, a study to establish the requirements for Interconnection with the Company System.

u. "Island Mode" means a mode of operation when a Microgrid that normally operates in Grid-Connected Mode is disconnected from the Company System at the PCC, and the Microgrid is generating or producing energy to provide electric service within the Microgrid under the operational coordination of the Microgrid Operator. Hybrid Microgrids may enter Island Mode only under (1) Emergency Events, or (2) as otherwise permitted or directed by the Company.

v. "Microgrid," means a group of interconnected loads and distributed energy resources within clearly defined electrical boundaries that acts as a single self-governing controllable entity with respect to the utility's electrical grid and is connected to a public utility's electrical grid at the PCC to operate in Grid-Connected Mode and can disconnect from the utility's electrical grid to operate in Island Mode ~~only during Emergency Events~~, and that: (1) is subject to this Microgrid Services Tariff; and (2) generates or produces energy.

w. "Microgrid Participant" ~~or "Participant"~~ means ~~the~~ a Customer that has executed the appropriate documents with the Microgrid Operator to participate in the Hybrid Microgrid in which the Customer is located.

x. "Microgrid Operator" means the operator of a Customer Microgrid or Hybrid Microgrid.

y. "MW" means megawatt.

z. "Network System" means an electrical system in which two or more Company feeder sources are electrically tied together on the primary or secondary voltage level to form one power source for one or more Customers. The network system is designed to provide higher reliability for Customers connected to it..

aa. "Point of Common Coupling" or "PCC" is the point at which the Company and Microgrid interface.

bb. "Point of Interconnection" or "POI" is the point at which the Company and the Customer interface, including the Generating Facility, occurs.

cc. "Supervisory Control" or "SCADA" means remote monitoring and/or control of a Generating Facility's power output and interrupting device status by means of a communication channel that is acceptable to the Company.

dd. "Scheduled Island Mode Operation" means a Microgrid operating in Island Mode that is planned, ~~is~~ scheduled and coordinated in advance between the

Microgrid Operator and the Company, as more particularly described in Section H, below.

ee. "Total Rated Capacity" means the aggregate total of all Generating Facilities that intend to supply power to the Hybrid Microgrid during Island Mode as defined in Section 7 of Exhibit A to the ~~Interconnection Agreement~~Hybrid Microgrid Agreement.

ff. "Unscheduled Island Mode Operation" means a Microgrid operating in Island Mode that is not planned, scheduled, or coordinated in advance between the Microgrid Operator and the Company in response to an unplanned event on the Company System, as more particularly described in Section H, below.

B. AVAILABILITY

1. The Microgrid Services Tariff is available to a Microgrid that also meets the following criteria:

   a. The Microgrid will serve as a Customer Microgrid; or

   b. The Microgrid will serve as a Hybrid Microgrid, and

      i. the Hybrid Microgrid Operator establishes an account with the Company; and

      ii. each Microgrid Participant must be interconnected to the Company System and have a current account with the Company.

   c. Microgrid Operator must be currently authorized to do business in the State of Hawai'i and be in good standing.

2. Microgrids that do not Interconnect~~ed~~ to the Company System ~~so that theyand therefore are not capable of operating in Grid-Connected Mode~~ are not eligible for this Tariff.

3. For Hybrid Microgrids, existing tariffs and programs shall also be applicable.

4. For Customer Microgrids, existing tariffs and programs shall also be applicable, subject to the following:

   a. A Microgrid Operator of a Customer Microgrid may allocate costs without markup for electric service received from the Company to other persons within the electrical boundaries of the microgrid who have contracted to receive regular service from the microgrid.

~~3.~~5. A Microgrid Operator or Microgrid Participant with existing or future agreements to provide grid services to the Company are obligated to meet such requirements (e.g., availability, capacity, etc.) when such services are called. Participation in a Microgrid service whereby the operation of that Microgrid precludes the Customer (whether a Microgrid Operator or Microgrid Participant) from delivering services (e.g., because the Microgrid is in Island Mode) in accordance with said grid services

contract or tariff shall not absolve a Microgrid Operator or Microgrid Participant from such contractual or tariff obligations and inability to deliver services.

~~4.~~6. Microgrids shall, at minimum, meet the requirements of all applicable Hawaii ~~L~~laws and ~~R~~regulations governing generating resources.

~~5.~~7. Microgrids operating in Island Mode shall not be included in the calculation of the Company's Renewable Portfolio Standards.

C. RESPONSIBILITIES AMONG THE PARTIES

1. A Microgrid Operator of a Customer Microgrid shall at all times indemnify, defend and hold harmless Company from any and all damages, losses, claims and actions, including, without limitation, reasonable attorneys' fees and costs, and all expenses incidental to such losses, damages, claims or actions, based upon or arising out of damage to property or injuries to persons (including death) in any way arising out of or related to the Customer Microgrid, except to the extent that such damages, losses, claims, or actions were directly caused by the negligence or willful misconduct of the Company.

2. A Microgrid Operator of a Hybrid Microgrid shall at all times indemnify, defend and hold harmless Company from any and all damages, losses, claims and actions, including, without limitation, reasonable attorneys' fees and costs, and all expenses incidental to such losses, damages, claims or actions, based upon or arising out of damage to property or injuries to persons (including death) in any way arising out of or related to the Hybrid Microgrid Facility, Microgrid Operator's performance of its obligations under the ~~Interconnection Agreement~~Hybrid Microgrid Agreement, the operation or maintenance of the Hybrid Microgrid during Island Mode, and/or Company's actions taken in accordance with the ~~Interconnection Agreement~~Hybrid Microgrid Agreement, except to the extent that such damages, losses, claims, or actions were directly caused by the negligence or willful misconduct of the Company.

3. Limitation of Liability - Customer Microgrids. The Company shall not be responsible for for any damages, losses, claims and/or ~~damages~~ actions arising out of or related to the Customer Microgrid, except to the extent such damages, losses, claims, and/or actions are directly caused by the negligence or willfull misconduct of Company; provided that the Company is not excused for failure to perform in accordance with its contracts, tariffs or applicable law.

4. Limitation of Liability - Hybrid Microgrids. The Company shall not be responsible for any damages, losses, claims and/or ~~damages~~ actions of any Participant or Microgrid Operator arising out of or related to (a) the Hybrid Microgid Facility and/or the operation or maintenance of the Hybrid Microgrid occurring during Island Mode, and/or (b) Company's exercise of rights and obligations with respect to any Generating Facility and/or Customer within the Hybrid Microgrid, whether in Grid-Connected or Island Mode, except to the extent such damages, losses, claims, and/or actions are directly caused by the negligence or willful misconduct of Company; provided that the Company is not excused for failure to perform in accordance with its contracts, tariffs or applicable law.

~~5.~~

D. INTERCONNECTION

1. ~~Each Microgrid shall be designed to Interconnect and operate in Grid-Connected and Island Mode with the Company System without adversely affecting the operations of the connected electric grid or the operations of its Microgrid Participants and without presenting safety hazards to the Company's or other Customers' personnel~~Each Microgrid shall be designed to Interconnect and operate in Grid-Connected Mode and in Island Mode with the Company System without adversely affecting the operations of the connected electric grid and without presenting safety hazards to the Company's or other Customers' personnel, and in the case of a Hybrid Microgrid without adversely affecting the operations of its Microgrid Participants. The Microgrid facilities and the interconnection systems shall be in compliance with all applicable safety and performance standards of the National Electric Code (NEC), National Fire Protection Association (NFPA) codes and standards, the Institute of Electrical and Electronics Engineers (IEEE), the Company's interconnection standards and procedures provided in Rule 14H, as amended from time to time, and also subject to any other requirements as may be specified in the ~~Interconnection Agreement~~Hybrid Microgrid Agreement or Customer Interconnection Agreement. The foregoing requirements shall apply to each of the following:

   a. Customer Microgrids are subject to the applicable program or Rule~~,~~ for which it is seeking Interconnection.

   b. Hybrid Microgrids will require a~~n~~ ~~Interconnection Agreement~~Hybrid Microgrid Agreement with the Company, subject to the terms and conditions set forth in Rule 14H and other applicable Company rules.

   c. A Microgrid under this ~~t~~Tariff shall be Interconnected at the Distribution Level and shall follow the applicable Rule 14H Interconnection process at the time of Interconnection.

      i. Hybrid Microgrids seeking Interconnection to the Company's Distribution Level Network System (i.e., spot or grid network) will not be allowed.

2. The Total Rated Capacity of the Hybrid Microgrid cannot exceed 3 MW (AC) on Oahu, 1 MW (AC) on Maui Island, or 1 MW (AC) on Hawaii Island. A Microgrid with Generating Facilities with a Total Rated Capacity greater than the specified

3. Hybrid Microgrid Interconnection Process

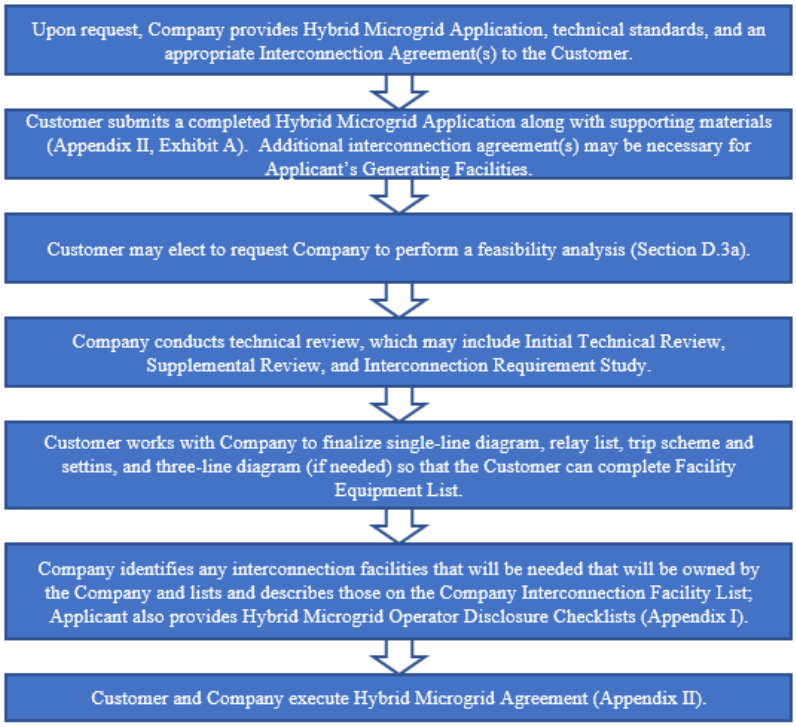

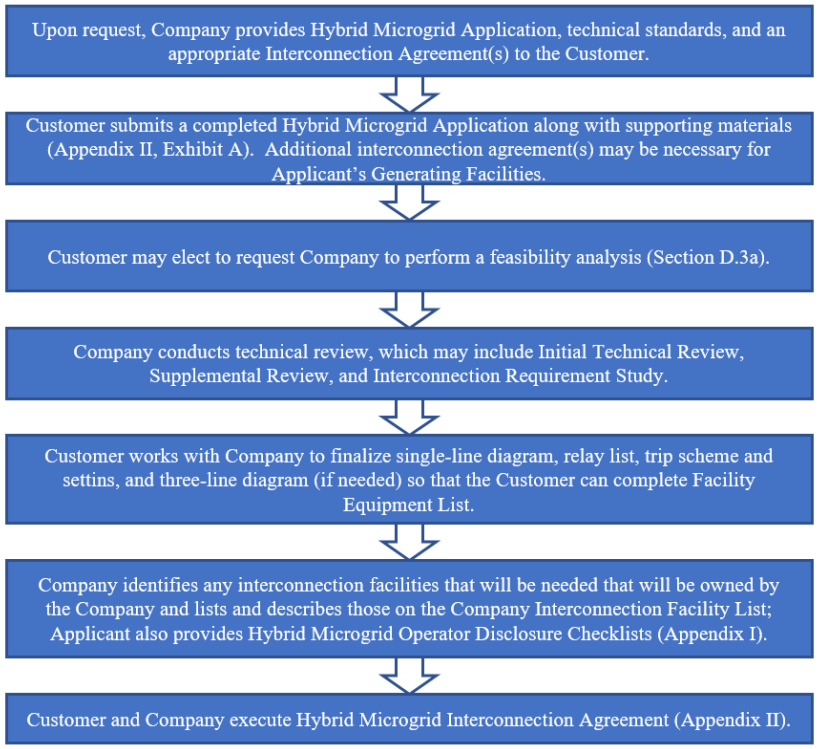

a. Upon submittal of the Hybrid Microgrid Application (Section F.1), the Applicant may choose to request that the Company perform a feasibility analysis for each Hybrid Microgrid submitted, taking into account any design

considerations described by the Applicant that impact the feasibility or classification of the Microgrid. The ~~feasilibility~~ feasibility analysis will include a preliminary assessment of the required electrical facility additions or upgrades to enable the Hybrid Microgrid based on the proposed configuration. The feasibility analysis will not include any assessment of the performance of the Hybrid Microgrid in Island Mode.

b. If the Applicant chooses to undertake a feasibility analysis, the Applicant shall agree to pay the cost estimate for the feasibility analysis provided by the Company. The Company shall make best efforts to complete the feasibility analysis within one hundred twenty (120) calendar days of the Company's receipt of all of the following: (a) the Applicant's written agreement to move forward with the feasibility analysis; (b) a complete set of data, to the Company's satisfaction (see Hybrid Microgrid Agreement Exhibit A), needed to conduct the feasibility analysis; and (c) payment of the feasibility analysis cost.

c. The completion of the feasibility analysis may include the Company's proposal to the Applicant of the following:(a) Interconnection requirements and a non-binding, good faith estimate of the Company's portion of the costs to perform the Interconnection requirements; (b) protection and synchronizing relays and settings, protection, synchronizing and control schemes; and/or (c) any other equipment requirements necessary to enable the Hybrid Microgrid.

d. The feasibility analysis is intended to inform the Applicant regarding potential Interconnection facilities and costs required to Interconnect the Hybrid Microgrid prior to development of the Hybrid Microgrid. The ~~feasbility~~ feasibility analysis may be used to inform the scope of the Interconnection Requirements Study should one be required pursuant to Rule 14H, Appendix III.

e. Additional Interconnection facilities required to enable the Hybrid Microgrid~~s~~ shall be borne by the Applicant.

f. Subsequent to the submittal of a Hybrid Microgrid Application and the feasibility analysis, if applicable, and prior to the execution of a~~n~~ ~~Interconnection Agreement~~Hybrid Microgrid Agreement, the Applicant may revise the Hybrid Microgrid. Following a complete Hybrid Microgrid Application submittal, the interconnection process as described in Rule 14H will be followed.

4. The proposed PCC between a Hybrid Microgrid and the Company System shall be reviewed to ensure that the Hybrid Microgrid boundary is properly defined and can be isolated from the rest of the Company System for the purpose of Island Mode operation. The Company System within a Hybrid Microgrid boundary shall also be examined to ensure adequate thermal rating is available.

5. Under no circumstances shall a Customer or Microgrid Operator Interconnect and~~/or~~ operate a Hybrid Microgrid or Customer Microgrid with the Company's System without prior written approval by the Company in the form of a fully executed ~~Interconnection Agreement~~Hybrid Microgrid Agreement for Hybrid Microgrids or Customer Interconnection Agreement for Customer Microgrids.

E. BILLING AND COMPENSATION

1. ~~Compensation for~~ Customer Microgrids.

   a. ~~For a Customer Microgrid, the Microgrid Operator is a Company Customer and a~~ Subject to the provisions of Section B.4., all ~~All~~ applicable energy credit rates and compensation under existing applicable programs, Customer tariff(s), and rate schedules will apply to the ~~Microgrid Operator~~Customer of the Customer Microgrid during Grid-Connected Mode. The Microgrid Operator may be a Customer.

2. Compensation for Hybrid Microgrid Operator and Microgrid Participants.

   a. For a Hybrid Microgrid Operator and all Microgrid Participants, all applicable energy credit rates and compensation will apply during Grid-Connected Mode and Island Mode. While operating in Island Mode, all existing applicable Customer tariffs and programs shall remain in effect and all energy delivered and sold within the Microgrid during the period will be deemed transacted with the Company pursuant to the tariffs.

   b. Any Generating Facility with an appropriate Customer Interconnection Agreement executed with the Company and supplying energy to a Hybrid Microgrid during Island Mode, and without an existing means for compensation by the utility (e.g., PPA, tariff), shall be compensated by Energy Credit Rates as defined and outlined in Rule No. 24 for energy supplied during Island Mode only.

   c. Customers within a Hybrid Microgrid shall be billed monthly for the energy supplied by the Company, in accordance with Rule No. 8, the applicable rate schedule, and Company's rules filed with the Commission.

3. Alternative Hybrid Microgrids. The developer of a proposed Hybrid Microgrid may make a proposal for Microgrids not covered by this Tariff to the Company, which would, if acceptable to the Company, be incorporated in a separate agreement with the Company that is subject to Commission approval.

4. Resilience. Compensation for resilience grid services may be compensable under an appropriate resiliency tariff, rate, or rider.

5. Customer Microgrids shall be subject to Schedule SS (Standby Service), as modified from time to time.

F. HYBRID MICROGRID PARTICIPANTS

1. Nothing in any agreement between the Microgrid Operator and a Microgrid Participant shall be deemed to alter or modify any rate schedule, charge, or condition of service established from time to time by the Commission for electric service provided by the Company. All such rates and charges from the Customer's applicable rate schedule shall apply and remain, subject to change in accordance with Commission rules.

2. The Hybrid Microgrid Operator Disclosure Checklist is attached hereto as Appendix I, which each Microgrid Operator shall complete with each of its Microgrid Participants. The Microgrid Operator will submit completed

Disclosure Checklists from all Microgrid Participants as part of the Hybrid Microgrid Application process.

~~3.~~ The Disclosure Checklist is supplemental to and does not replace the disclosure and consumer protection requirements required of any other tariff or program.

G. HYBRID MICROGRID APPLICATION

1. For a Hybrid Microgrid, the proposed Microgrid Operator shall submit a Hybrid Microgrid Application to the Company.

2. The Company shall review each Applicant's Hybrid Microgrid Application and determine whether the Microgrid and Applicant have met the requirements to be eligible under this tariff. The Company shall communicate to the Applicant any deficiencies in its Hybrid Microgrid Application for opportunity to remedy.

3. A Hybrid Microgrid Application~~s~~ may be submitted beginning on the effective date of this Tariff. A Hybrid Microgrid Application~~s~~ deemed complete (providing all information required under this section) shall receive a timestamp, which shall serve as the date of the Applicant's Hybrid Microgrid Application for Interconnection queue purposes.~~,~~ ~~in the event~~ If more than one Applicant is seeking to establish the same or partially overlapping microgrid boundaries. Microgrid boundaries will be established on a first come first served basis.

4. If the Applicant's Hybrid Microgrid Application is approved, the Applicant shall execute a~~n~~ ~~Interconnection Agreement~~Hybrid Microgrid Agreement with the Company for the duration of the approved Hybrid Microgrid. The ~~Interconnection Agreement~~Hybrid Microgrid Agreement, and its Exhibits, shall include information to govern the expected performance and operation of the Hybrid Microgrid during, and leading into, Emergency Events, as well as transitioning to and from Island Mode to Grid-Connected Mode.

H. MICROGRID OPERATION

1. Capitalized terms used in this section are as defined in this Rule No. XX, Microgrid Services Tariff, and Rule 14H. In the event of any conflict between capitalized terms used in this section and Rule 14H, defined terms in this Rule shall control.

2. The Company may disconnect ~~the~~ a Customer Microgrid or a Hybrid Microgrid in the same manner as defined for a Generating Facility in Rule 14H Appendix I, Section 4.a and 4.b.

3. Customer Microgrid Operation: A Customer Microgrid may intentionally enter into and out of Island Mode on a scheduled or unscheduled basis. A Scheduled Island Mode Operation can be initiated through (1) a manual action by the Microgrid Operator of a Customer Microgrid or (2) by other operating dispatch means (e.g., energy management system). The Microgrid Operator shall ~~Company may~~ notify the Company~~Microgrid Operator~~ in ~~that~~ advance, when possible, ~~notice~~ of a Scheduled Island Mode Operation~~ with the Company System may be required in order to assure that a smooth transition is executed and coordinated~~. Scheduled Island Mode Operation is permitted provided the power export or import, across the PCC to the Company is zero kW (+/-1% of the Total Rated Capacity).

Scheduled Island Mode Operation is normally initiated to test a Customer Microgrid in Island Mode, to permit maintenance, repair or replacement of Microgrid components or facilities, or as a pre-emptive action ahead of impending weather events or ~~natual~~ natural disasters or in response to other unusual conditions on the Company System or within the microgrid.

An Unscheduled Island Mode Operation is in response to abnormal conditions present on the Company System via an autonomous action by the Customer Microgrid to transition from Grid-Connected Mode to Island Mode.

A Customer Microgrid may disconnect from the Company System and transition from Grid-Connected Mode to Island Mode, (1) under any of the Trip or Cease to Energize conditions as required by Rule 14H, Appendix I (e.g., Table 4A-1, Table-4A-4, and Table 4A-5 of Rule 14H, Appendix I) or (2) where anti-islanding[2] conditions are present and where the Generating Facility is required to Cease to Energize and Trip within two seconds where an island may be detected on the Company System. In either of these cases, the Customer Microgrid may transition to Island Mode provided that the Customer Microgrid does not energize any part of the Company System.

a. Transition from Grid-Connected Mode to Island Mode: If the Customer Microgrid transitions from Grid-Connected Mode to Island Mode while the Company System is operating within the Continuous Operating region defined in Rule 14H, Appendix I, Table 4A-1 (Voltage Ride-Through), Table 4A-4 (Frequency Ride-Through for Oahu, Hawaii Island, Maui), and Table 4A-5 (Frequency Ride-Through for Molokai and Lanai), the act of transitioning shall not cause step or ramp changes in the voltage measured at the PCC or POI exceeding 5% of nominal and exceeding 5% per second averaged over a period of one second. This Frequency Ride-Through requirement (regardless of whether the Company System has a disturbance) also ensures that the act of transitioning does not cause a frequency disturbance on the Company System. These limits also apply to frequent switching of capacitors, frequent tripping or mis-operation of ~~the~~ any d~~D~~istributed Generating Facility, or frequent energization of transformers.

   i. During a Scheduled Island Mode Operation, the Customer Microgrid shall additionally ramp down or ramp up such that the power export or import, respectively, across the PCC to the utility during the transition from Grid-Connected Mode to Island Mode is zero kW (+/-1% of the Total Rated Capacity ~~rated power~~ of the Customer Microgrid) at the ramp rate defined in accordance with the Soft-Start Ramp Rate defined in Section 4A of Rule 14H, Appendix I.

b. Reconnection of a Customer Microgrid with the Company System: A Customer Microgrid operating in Island Mode may reconnect and transition back to Grid-Connected Mode when the voltage at the PCC or POI satisfies the Return to Service requirements defined in Rule 14H, Appendix I, Section 4A.g, and the system frequency satisfies the enter service criteria found

[2] Per Section 8.1 of IEEE 1547-2018, "For an unintentional island in which the DER energizes a portion of the Area EPS through the PCC, the DER shall detect the island, cease to energize the Area EPS, and trip within 2 s[econds] of the formation of an island."

in UL-1741 Supplement SA Standard for Grid Support Utility Interactive Inverters and Converters using the applicable utility Source Requirements Document. Upon reconnecting with the Company System, the requirements for Synchronization defined in Rule 14H, Appendix I, Section 4.c shall be met, and shall not cause step or ramp changes in voltage defined in Section H.3.a, above.

i. Reconnection shall be coordinated with the Company to ensure safe and reliable operation of the Company System.

4. Hybrid Microgrid Operation: Operation of a Hybrid Microgrid will be governed by the ~~Interconnection Agreement~~Hybrid Microgrid Agreement, including, but not limited to, Exhibit B and Exhibit F, between the Company and the Microgrid Operator of a Hybrid Microgrid. A Hybrid Microgrid's use of the Company System to form a Hybrid Microgrid requires greater operational coordination for public safety and overall Company System operation. A Hybrid Microgrid Operator's request(s) for Scheduled Island Mode Operation pursuant to the agreed upon ~~Interconnection Agreement~~Hybrid Microgrid Agreement~~,~~ will be permitted under specific circumstances with the Company's prior approval. The ~~Interconnection Agreement~~Hybrid Microgrid Agreement will also include operational coordination requirements applicable to the unique characteristics of the Hybrid Microgrid and general requirements consistent with relevant provisions of Rule 14H.

5. Hybrid Microgrid Monitoring and Reporting: Each Hybrid Microgrid by design shall provide means of secure communications and information exchange between the Company SCADA system and the Microgrid controller. The monitoring and reporting shall follow a standard register list for information exchange, which includes (at minimum):

   a. Status of Generating Facilities within the Microgrid;

   b. Status of controllable (or automatically operated) distribution assets inside Microgrid, such as switches, circuit breakers, reclosers, load tap changers, voltage regulator, and switched capacitors banks, etc.;

   c. Voltage and power flow measurements at PCC;

   d. Reserve capacity of the Microgrid;

   e. Remaining load serving duration for the Hybrid Microgrid (calculated based on actual load at each reading interval);

   f. Minimum and maximum voltages across the Hybrid Microgrid;

   g. Fault detection and isolation, if applicable;

   h. Modes of operation for the Hybrid Microgrid and Generating Facilities within the Hybrid Microgrid;

   i. Any alarms, flags, or lockout condition;

   j. Production level and load demand facilities and Customer loads during Island Mode; and

   k. Active setting groups for protection relays in the Hybrid Microgrid.

6. Remote control: The Microgrid Operator shall provide a means of remote

control for PCC of the Hybrid Microgrid.

7. Adjustable settings: Generating Facilities within a Hybrid Microgrid shall have the ability to adjust protection settings to implement various setting groups for different modes of operation of the Generating Facility and the Hybrid Microgrid.

I. HYBRID MICROGRID CAPACITY ALLOCATION

1. This capacity allocation applies only to Hybrid Microgrids.

2. The Company shall accept Hybrid Microgrid Applications for a period of three years from the effective date of this ~~t~~Tariff, or until a program limit based on the aggregated Total Rated Capacity of all Hybrid Microgrids with executed Interconnection Agreements of up to 6 MW on Oahu; 1 MW on Hawaii Island; 1 MW on Maui Island is reached, whichever comes first, or as required by Commission Order.

~~2.~~3. The Company shall provide an annual report to the Commission after the effective date of this Tariff, and every three years thereafter, or as directed by the Commission, of the Total Rated Capacity, by island.

APPENDIX II

MICROGRID SERVICES TARIFF – HYBRID MICROGRID ~~INTERCONNECTION~~ AGREEMENT

(3 MW or less)

This Microgrid Services Tariff - Hybrid Microgrid Interconnection Agreement (3 MW or less), including all Exhibits and Schedules attached hereto, (this "Agreement" or "Interconnection Agreement") is made by and between [Hawaiian Electric Company, Inc., Maui Electric Company, Ltd., Hawai'i Electric Light Company, Inc.] ("Company"), and _____ _____ ("Microgrid Operator"), and is made, effective and binding as of _____ ("Effective Date"). Company and Microgrid Operator may be referred to individually as a "Party" and collectively as the "Parties." Defined terms are in Exhibit G.

WHEREAS, Company is an operating electric public utility subject to the Hawai'i Public Utilities law, Hawaii Revised Statutes, Chapter 269, and the rules and regulations of the Hawai'i Public Utilities Commission;

WHEREAS, Microgrid Operator is an approved "Microgrid Operator" as defined in the Company's Microgrid Services Tariff ("Microgrid Services Tariff"), and intends to construct a Hybrid Microgrid (as defined in Section 4 below), that qualifies for the Company's Microgrid Services program ("Microgrid Services Program"), and desires to be able to operate, ~~upon Company's direction~~, in Island Mode disconnected from the Company's System in accordance with Tariff Rule No. XXX and/or this Agreement;

WHEREAS, the Hybrid Microgrid is intended to enable the Microgrid Operator to enter into Island-Mode during Emergency Events;

WHEREAS, the purpose of this Agreement is to ensure that the operation of the Hybrid Microgrid, whose Total ~~Rated Capacity~~Peak Demand ~~of the Generating Facilities~~ within the boundaries of the Hybrid Microgrid is three (3) megawatts ("MW") or less, does not adversely affect the safety and reliability of or otherwise interfere with the Company's operations;

WHEREAS, for clarity purposes, any Generating Facility owned by a Microgrid Operator or other Customer must have its own Customer Interconnection Agreement; and

WHEREAS, unless otherwise defined herein, capitalized terms shall have the meaning ascribed to them in the Microgrid Services Tariff, such definitions being transcribed herein as Exhibit G (Definitions to Microgrid Services Tariff – Hybrid Microgrid Interconnection Agreement), as the same may be amended from time to time.

NOW, THEREFORE, in consideration of the premises and the respective promises herein, the Company and the Microgrid Operator hereby agree as follows:

1. **Notice and Disclaimer Regarding Future Rate and Tariff Modifications**. This Agreement shall, at all times, be subject to modification by the Commission as said Commission may, from time to time, direct in the exercise of its jurisdiction. Without limiting the foregoing, Microgrid Operator expressly acknowledges the following:

(a) The Microgrid Services Tariff is subject to modification by the Commission.

(b) **Your Agreement and Hybrid Microgrid shall be subject to any future modifications ordered by the Commission. You agree to pay for any costs related to such Commission-ordered modifications**.

BY SIGNING BELOW, YOU ACKNOWLEDGE THAT YOU HAVE READ, UNDERSTAND AND AGREE TO THE ABOVE NOTICE AND DISCLAIMER.

2. **Term and Termination.** The Term of this Agreement shall commence on the Effective Date and shall end five (5) years after the Commercial Operations Date, unless extended upon agreement by the Parties. This Agreement may be terminated prior to the end of the Term as follows:

(a) The Parties agree in writing to terminate the Agreement;

(b) The Microgrid Operator may terminate this Agreement:

~~(i)~~ Prior to the Commercial Operations Date of the Hybrid Microgrid, by giving written notice to the Company of such termination; or

(i)

(ii) ~~On or after the Commercial Operations Date, effective 30 calendar days after written notice to the Company of such termination;~~ If, the Company, by act or omission, materially breaches or defaults on any material covenant, condition or other provision of this Agreement, if such breach or default is not cured within thirty (30) calendar days of such written notice to the Company, unless a different timeframe is specified in such notice; provided, however, that if it is objectively impossible to cure such breach or default within said thirty (30) Day period, then, for so long as the Company is making a good faith effort to cure such breach or default, then the Company may have such additional time as agreed to by the Parties, not to exceed 90 days, to cure such breach or default.

(c) The Company may terminate this Agreement:

(i) Effective 30 calendar days after written notice to the Microgrid Operator if the Commercial Operation Date does not occur within 18 months of the Effective Date;

~~Effective 30 calendar days after written notice to the Microgrid Operator that there is a material change in an applicable statute, rule or tariff and Company reasonably concludes that the Microgrid Services Program cannot be continued;~~

(ii) Upon written notice to the Microgrid Operator if the Microgrid Operator becomes insolvent, or makes an assignment for the benefit of creditors; or shall have an order for relief in an involuntary case under the bankruptcy laws as now or hereafter constituted entered against it, or shall commence a voluntary case under the bankruptcy laws as now or hereafter constituted, or shall file any petition or answer seeking for itself any arrangement, composition, adjustment, liquidation, dissolution or similar relief to which it may be entitled under any present or future law; or seeks or consents to or acquiesces in the appointment of or taking possession by, any custodian, trustee, receiver or liquidator of it or of all or a substantial part of its properties or assets; or takes action looking to its dissolution or liquidation, and Microgrid Operator is unable to remedy such actions within thirty (30) calendar days of the occurrence of such breach or default;

(iii) If, Microgrid Operator, by act or omission, materially breaches or defaults on any material covenant, condition or other provision of this Agreement, if such breach or default is not cured within thirty (30) calendar days of such written notice to the Microgrid Operator, unless a ~~different~~ longer timeframe is specified in such notice; provided, however, that if it is objectively impossible to cure such breach or default within said thirty (30) Day period, then, for so long as the Microgrid Operator is making a good faith effort to cure such breach or default, then the Microgrid Operator may have such additional time as agreed to by the Parties, not to exceed 90 days, to cure such breach or default.

(d) Microgrid Operator Obligations Upon Termination. Upon termination of this Agreement, whether by expiration of the Term or by termination by either P~~p~~arty, Microgrid Operator shall, as of the date of termination:

(i) Disconnect and remove the Hybrid Microgrid Facility from the Company System so that it is no longer capable of operating in parallel with the Company System, subject to Company's confirmation of such disconnection and removal;

~~(ii) Provide written evidence to Company that Microgrid Operator has terminated all Participation Agreements with its Participants; and~~

~~(iii)~~(ii) Cooperate with Company to complete any other required procedures and tasks to complete the disconnection and removal of the Hybrid Microgrid Facility from the Company System.

(e) In the event there is a material change in the applicable statute, rule, or tariff, that materially adversely affects a Party, at the request of the adversely affected Party, the ~~Company~~Parties will enter into negotiations ~~with the Microgrid Operator~~ with the goal of ~~to~~ reaching an agreement to continue operations of the Microgrid. Should an agreement not be reached, each ~~p~~Party can petition the Public Utilities Commission to issue a decision on the dispute. If the Public Utilities Commission issues a decision that is not mutually agreeable to the Parties, then such Party can terminate this Agreement effective 30 calendar days after written notice to the other Party of such termination. Notwithstanding the foregoing, neither Party is obligated to perform any obligation under this Agreement if such obligation violates such applicable statute, rule, or tariff.

(f) In the event of a material breach or default by the Microgrid Operator for which the Company sends a written notice pursuant to this Section 2, Company shall also send a copy of the notice as soon as practicable to any financing party for the Hybrid Microgrid facility whose contact information has been provided to the Company. Any such financing party shall have the right to cure the alleged breach within the cure period provided in Section 2 and Company agrees to accept any such cure as if made by the Microgrid Operator. The Company shall be under no obligation to provide any such financing party with any confidential information. With respect to the Microgrid Operator, the Company shall be under no obligation to provide any such financing party with any information it may have which is confidential to the Microgrid Operator unless the Microgrid Operator has provided written consent to the Company permitting the release to the financing party of such confidential information.

3. **Hybrid Microgrid Description**. The Hybrid Microgrid shall at no time expand beyond the electrical boundaries as shown in Exhibit A (Description of Hybrid Microgrid) and Exhibit B (Microgrid Operator-Owned Generating Facility and Interconnection Facilities) without prior written consent of the Comp-any, which the Company may not unreasonably withhold, including providing Hybrid Microgrid Operator with options to satisfy the Company's concerns, to the extent such options exist ~~if any in its sole and absolute discretion~~.

4. **Scope of Agreement**. The Parties understand and agree that this Agreement applies only to the operation of the Hybrid Microgrid described in Exhibit A.

5. **Microgrid Operation**. The Company shall allow Microgrid Operator to Interconnect and operate the Hybrid Microgrid and disconnect with the Company System in accordance with the terms and conditions of this Agreement, Exhibit F, and Company Rule 14H, provided that the Company determines that all applicable requirements and conditions of this Agreement, the Microgrid Services Tariff, and Rule 14H have been satisfied. The additional provisions in Exhibit B to this Agreement shall also apply. To the extent the provisions of Exhibit B conflict with Rule 14H or other provisions in this Agreement, the provisions of Exhibit B shall control.

6. **Permits and Licenses**. Microgrid Operator shall be responsible for the design, installation, operation, and maintenance of the Hybrid Microgrid and shall obtain, at its expense, and maintain any required governmental authorizations and/or permits for the construction and operation of the Hybrid Microgrid.

7. **Installation**.

(a) Design, installation, operation and maintenance of the Hybrid Microgrid shall include control and protection equipment as specified by the Company.

(b) The Company may enter premises where the Hybrid Microgrid is located, as permitted by law or tariff, for the following purposes: (1) to inspect Hybrid Microgrid's protective devices, microgrid controllers, and read or test meter(s); and (2) to disconnect the Hybrid Microgrid and/or service to Microgrid Operator or its Participants, whenever in Company's sole opinion, a hazardous condition exists and such immediate action is necessary to protect persons, Company's facilities, or property of others from damage or interference caused by the Hybrid Microgrid, or the absence or failure of properly operating protective device.

(c) Under no circumstances shall a Microgrid Operator Interconnect, disconnect, and/or operate the Hybrid Microgrid with the Company System in a manner in violation of Rule XXX or without prior approval by the Company.

(d) Once the Hybrid Microgrid is Interconnected to the Company System, the Company reserves the right to require the installation of, or modifications to, equipment determined by the Company to be necessary to facilitate the delivery of reliable electric service to its Customers, subject to the requirement that such installation or modification be consistent with applicable Interconnection standards (e.g., Rule 14H). The Company shall provide a written explanation of the need for such installation or modification, provided that the costs associated with such post interconnection installations or modifications shall be paid by the utility or through other mechanisms approved by the Commission, except where the Company determines that such installations or modifications are necessary to remedy a safety or reliability issue caused by the Microgrid Operator or the Hybrid Microgrid.

(e) If the Hybrid Microgrid is a facility Interconnecting at the Distribution Level, the Hybrid Microgrid shall follow the applicable Rule 14H interconnection process at the time of Interconnection. Notwithstanding the foregoing, Hybrid Microgrids seeking Interconnection to the Company's Distribution Level Network System (i.e., spot or grid network) shall not be allowed.

(f) The Hybrid Microgrid must comply with the Microgrid operation requirements set forth in Section H of the Microgrid Services Tariff, and Exhibit F to this Agreement.

8. Interconnection Facilities.

(a) Microgrid Operator-Owned Interconnection Facilities.

(1) Pursuant to Company Rule 14H, Appendix I and Section 6.c (Review of Design Drawings), the Company must review and approve Microgrid Operator's single-line and three-line diagrams prior to Microgrid Operator constructing the Hybrid Microgrid Interconnection Facilities.

(2) ~~Maximum~~ Total Rated Capacity. The Hybrid Microgrid shall not have Generating Facilities with an aggregate nameplate capacity in excess of __ MW ~~Total Rated Capacity~~. ~~Notwithstanding anything to the contrary, in no event shall the aggregate nameplate generation of all Generating Facilities (i.e., Total Rated Capacity) of the Hybrid Microgrid exceed 3 MW (AC) gross for Oahu, 1 MW (AC) gross for Maui Island, or 1 MW (AC) gross for Hawaii Island.~~

(3) The Microgrid Operator agrees to test the Hybrid Microgrid, to maintain operating records, and to follow good engineering and ~~such~~ operating procedures, and include those operating procedures ~~as may be~~ specified by the Company to protect the Company System from damages resulting from the operation of the Hybrid Microgrid, ~~including~~ such as testing, records and

operating procedures as more fully described in Exhibit C attached hereto, and as also specified in Exhibit E and Exhibit F, attached hereto.

(4) The Company may inspect the Hybrid Microgrid and Microgrid Operator I nterconnection Facilities from time to time.

(b) Company Interconnection Facilities.

(1) All Company Interconnection Facilities shall be the property of the Company. Where portions of the Company Interconnection Facilities are located on the Microgrid Operator's premises, the Microgrid Operator shall provide, at no expense to the Company, a suitable location for and access to all such equipment. If a 120/240 Volt power source or sources are required, the Microgrid Operator shall provide these at no expense to the Company.

(2) The Microgrid Operator agrees to pay to the Company a non-refundable contribution for the Company's investment in the Company Interconnection Facilities described in Exhibit C (Company-Owned Interconnection Facilities), subject to the terms and conditions included in Exhibit C and to pay for other Interconnection costs. The Interconnection costs will not include the cost of an initial technical screening of the impact of the Hybrid Microgrid on the Company System.

The Microgrid Operator shall provide Security and replenish the Security amount to the level required under this Agreement within fifteen (15) business days after any draw on the Security by Company or any reduction in the value of Security below the required level for any other reason. In addition to any other remedy available to it, Company may, before or after termination of this Agreement, draw from the Security such amounts as are necessary to recover amounts Company is owed pursuant to this Agreement and/or pursuant to any other obligation of Microgrid Operator to Company under the Company's applicable electric service tariff, the Microgrid Services Tariff or any other applicable law, regulation, rule, ordinance or regulatory order. Any failure to draw upon the Security or other security for any amounts due Company shall not prejudice Company's rights to recover such amounts in any other manner.

If the letter of credit is not renewed or extended at least thirty (30) calendar days prior to its expiration or earlier termination, Company shall have the right to draw immediately upon the full amount of the letter of credit and the right (but not the obligation) to place the L/C Proceeds, at Microgrid Operator's cost, in an escrow account until and unless Microgrid Operator provides a satisfactory substitute letter of credit. If it so chooses, the Company will place the L/C Proceeds in an escrow account with Escrow Agent. Thereafter, the Company shall have the right to apply the L/C Proceeds as necessary to recover amounts Company is owed. Company shall have the sole authority to draw from the account and Microgrid Operator shall have no rights to the L/C Proceeds. Upon full satisfaction of Microgrid Operator's obligations under this Agreement, including recovery by Company of amounts owed to it, Company shall instruct the Escrow Agent to remit to the bank that issued the letter of credit that was the source of the L/C Proceeds the remaining balance (if any) of the L/C Proceeds. Any failure to draw upon the L/C Proceeds for any amounts due Company shall not prejudice Company's rights to recover such amounts in any other manner.

Such letter of credit shall remain in effect through the earlier of forty-five (45) calendar days after the Commercial Operations Date, or seventy-five (75) calendar days after the termination of this Agreement and true-up of any costs owed to Company.

~~Promptly following the Commercial Operations Date, and the complete performance of all of Microgrid Operator's obligations under this Agreement, including but not limited to the~~

~~obligation to pay any and all amounts owed by Microgrid Operator to Company, Company shall release the Security (including any accumulated interest, if applicable) to Microgrid Operator.~~

(c) Generating Facilities within the Hybrid Microgrid

(1) In order to be used by the Microgrid Operator, all Generating Facilities and their owners supplying power to the Hybrid Microgrid must have:

i. Executed a Customer Interconnection Agreement with the Company and comply with all of the terms and conditions of that Customer Interconnection Agreement;

ii. Agreed to properly maintain adequate levels of protection and control schemes and corresponding settings - as defined in the applicable Customer Interconnection Agreement - associated with detecting and clearing short circuit faults on the Company System or those required for properly responding to abnormal system conditions (such as voltage and frequency ride-through requirements), as applicable to the Generating Facility, either included in external intelligent electronic devices (protection relays and controllers) or residing in power conversion systems (generators or inverters) of the facility;

iii. Agreed to provide reports or electronic setting files for all protection and control schemes and settings of the Hybrid Microgrid and its Generating Facility(ies) upon the request of the Company;

(2) The Microgrid Operator agrees that the Company may perform tests on the Generating Facilities as the Company deems appropriate.

9. **Meters.** As necessary, Company shall purchase, own, install and maintain a metering package suitable for measuring the electric energy to and from the Microgrid. If a metering package is required, (a) the metering point shall be as close as possible to the PCC as allowed by Company, (b) Microgrid Operator shall make available a mutually agreeable location for the metering package, (c) Microgrid Operator shall install, own and maintain the infrastructure and other related equipment associated with the metering package, including but not limited to all enclosures (meter cabinets, meter pedestals, meter sockets, pull boxes, and junction boxes, along with their grounding/bonding connections), CT/PT mounting structures, conduits and ductlines, enclosure support structures, ground buses, pads, test switches, terminal blocks, isolation relays, telephone surge suppressors, and analog phone lines (one per meter), subject to Company's review and approval, as described in Section 1(d) (Certain Specifications for the Hybrid Microgrid Facility) of Exhibit B (Microgrid Operator-Owned Generating Facility and Interconnection Facilities), (d) the Microgrid Operator shall install this infrastructure such that it meets the requirements set forth in Chapter Six (IPP Metering) of the latest edition of the Company's Electric Service Installation Manual (ESIM), (e) Company shall test such meter prior to installation and, should ~~an extension of~~ the Interconnection Agreement be extended, shall test such meter every fifth (5th) year, and (f) Microgrid Operator shall reimburse Company for all reasonably incurred costs for the procurement, installation, maintenance (including maintenance replacements) and testing work associated with the metering package.

Company shall provide at least twenty-four (24) hours' notice to Microgrid Operator prior to any test it may perform on the meters or metering equipment. Microgrid Operator shall have the right to have a representative present during each such test. Microgrid Operator may request, and Company shall perform, if requested, tests in addition to the every fifth-year test and Microgrid Operator shall pay the cost of such tests. Company may, in its sole discretion, perform tests in addition to the fifth-year test and Company shall pay the cost of such tests. Appropriate adjustments may be made, as mutually agreed by the parties, in the event of any material inaccuracy of the tested meters.

10. **Continuity of Service.** The Company may (1) disable the operation of the Hybrid Microgrid, ~~and/~~or (2) require the Microgrid Operator to enter into Island Mode~~disconnect the Hybrid Microgrid from the Company System and/or operate the Hybrid Microgrid in Island Mode~~:

(a) When necessary in order for the Company to construct, install, maintain, repair, replace, remove, investigate, test or inspect any of its equipment or any part of the Company System including, but not limited to, Generating Facilities within the Hybrid Microgrid, accommodating the installation and/or testing of non-utility owned facilities to the Company System; or obligations for providing electric service under applicable Tariffs and Rules; or if the Company determines that such disabling of Hybrid Microgrid Operation and/or operation in Island Mode is necessary because of emergency conditions[1], operating conditions on its system; or if either the Hybrid Microgrid does not operate in compliance with good engineering and operating practices or connection with the Hybrid Microgrid by the Company would require the Company to operate the Company System outside of good engineering and operating practices, and any situation that the Company System operator determines, at his or her sole discretion, could place in jeopardy system reliability.

(b) When Company determines that disabling of operation of the Hybrid Microgrid in Grid-Connected Mode or operation in Island Mode becomes necessary for engineering and/or operating reasons that are directly attributable to the Hybrid Microgrid, or Company System conditions exist that require disabling of operation of the Hybrid Microgrid in Grid-Connected Mode or operation in Island Mode for reliability and/or stability reasons.

11. **Personnel and System Safety**. Effective upon the Commercial Operations Date, the Hybrid Microgrid may Interconnect and operate in Grid-Connected and/or Island Mode with the Company System in accordance with this Agreement, provided that the Hybrid Microgrid does not adversely affect the operations of the connected electric grid or the operations of the Hybrid Microgrid Participants and does not present safety hazards to the Company's or Customers' equipment and/or personnel. Notwithstanding any other provision of this Agreement to the contrary, If at any time, the Company determines, in its sole discretion, that the Hybrid Microgrid may endanger the public, Company's personnel, and/or that the continued operation of the Hybrid Microgrid may endanger any person or property, the Company System or integrity thereof, or have an adverse effect on the safety, or power quality, and/or electric service of Customers, the Company shall have the right to (a) disable Hybrid Microgrid operation remotely or otherwise, (b) disconnect the Hybrid Microgrid from the Company System, and/or (bc) shutdown/de-energize the Generating Facilities part of the Hybrid Microgrid. The Hybrid Microgrid shall remain disabled, disconnected, and/or de-energized as the case may be until such time as the Company is satisfied that the conditions referred to above endangering or power quality condition(s) hashave been corrected. The Company reserves the right to inspect the Hybrid Microgrid Facility as necessary to assure the safety and reliability of the Company System at any time during the Term, and for an additional period of one (1) year thereafter.

12. **Prevention of Interference**. Whether in Grid-Connected Mode or Island Mode, tThe Microgrid Operator shall not operate equipment that superimposes a voltage or current upon the Company System that interferes with the Company's operations, service to the Company's Customers, or the Company's communication facilities. Such interference shall include, but not be limited to, overcurrent, voltage imbalance, and abnormal waveforms. If such interference occurs, the Microgrid Operator must diligently pursue and take corrective action at its own expense after being given notice and reasonable time to do so by the Company. If the Microgrid Operator does not take timely corrective action, or continues to operate the equipment causing interference without restriction or limit, the Company may, without liability, (a) disable Hybrid Microgrid operation, (b) shutdown/de-energize

[1] Emergency conditions refer to the need for immediate action in response to a situation that has caused injury, loss of life or property damage. Emergency conditions include, but are not limited to: a system emergency or forced outage; a potential hazard to Company personnel or the general public; a hazardous condition relating to the generating facility; the Hybrid Microgrid or any of its Generating Facilities is interfering with the Company's equipment or equipment belonging to other Customers (including non-utility generating equipment); the Hybrid Microgrid or any of its Generating Facility's protective devices have been tampered with by the Customer and/or owner and/or operator of the Hybrid Microgrid of any of its Generating Facilities; or a need for immediate action in response to a situation that has caused (or has the potential to cause) injury, loss of life or property damage.

the Generating Facilities part of the Hybrid Microgrid, and/or (c) disconnect the Microgrid Operator's equipment from the Hybrid Microgrid and/or the Company System.

13. Limitation of Liability; Indemnification.

(a) Limitation of Liability

(i) Company shall bear no liability and shall have no responsibility to Microgrid Operator or any Hybrid Microgrid Participant for any action(s) taken by Company in accordance with this Agreement, including without limitation, Section 10 (Continuity of Service) or Section 11 (Personnel and System Safety), or in accordance with Company's Customer Interconnection Agreement with respect to any Generating Facility within the Hybrid Microgrid, except to the extent of damages directly caused by the negligence or willful misconduct of Company; provided that the Company is not excused for failure to perform in accordance with its contracts, tariffs or applicable law.~~.~~.

(ii) Notwithstanding any other provision in this Agreement to the contrary, with respect to Company's provision of electric service to any Customer including the Microgrid Operator, any Company liability to such Customer shall be limited as set forth in the Company's tariffs and terms and conditions for electric service, and shall not be affected by the terms of this Agreement.

~~(ii)~~(iii) The Company shall not be responsible for any claims and/or damages of any Participant or Microgrid Operator arising out of or related to (a) the Hybrid Microgrid Facility and/or the operation or maintenance of the Hybrid Microgrid occurring during Island Mode, and/or (b) Company's exercise of rights and obligations with respect to any Generating Facility and/or Customer within the Hybrid Microgrid, whether in Grid-Connected or Island Mode, except to the extent such claims and/or damages are directly caused by the negligence or willful misconduct of Company; provided that the Company is not excused for failure to perform in accordance with its contracts, tariffs or applicable law.

(i) Each Party's liability to the other Party for failure to perform its obligations under this Agreement shall be limited to the amount of direct damage actually incurred. In no event shall either Party be liable to the other Party for any punitive, incidental, indirect, special, or consequential damages of any kind whatsoever, including for loss of business opportunity or profits, regardless of whether such damages were foreseen.

(b) Indemnification.

(i) Microgrid Operator shall at all times indemnify, defend and hold harmless Company from any and all damages, losses, claims and/or -actions, including, without limitation, reasonable attorneys' fees and costs, and all expenses incidental to such losses, damages, claims or actions, based upon or arising out of damage to property or injuries to persons (including death) in any way arising out of or related to the Hybrid Microgrid Facility, Microgrid Operator's performance of its obligations under ~~the~~ this Agreement, the operation or maintenance of the Hybrid Microgrid during Island Mode, and/or Company's actions taken in accordance with this Agreement, including Section 10 (Continuity of Service) or Section 11 (Personnel and System Safety), except to the extent that such damages, losses, claims, and/or actions were directly caused by the negligence or willful misconduct of Company.

~~(iii)~~(ii) Company shall at all times indemnify, defend and hold harmless Microgrid Operator from any and all damages, losses, claims and/or actions, including, without limitation, reasonable attorneys' fees and costs, and all expenses incidental to such losses, damages, claims or actions, based upon or

arising out of damage to property or injuries to persons (including death) in any way arising out of or related to the Company's ~~Hybrid Microgrid Facility, Microgrid Operator's~~ performance of its obligations under this Agreement, ~~the operation or maintenance of the Hybrid Microgrid during Island Mode, and/or Company's actions taken in accordance with this Agreement, including Section 10 (Continuity of Service) or Section 11 (Personnel and System Safety),~~ except to the extent that such damages, losses, claims, and/or actions were directly caused by the negligence or willful misconduct of Microgrid Operator and/or Participant.

14. **Microgrid Operator and Hybrid Microgrid Information.** By signing this Agreement, the Microgrid Operator expressly agrees and authorizes the Company to request and obtain from the Microgrid Operator and the Microgrid Operator Agents, at no cost to Company, information related to the Hybrid Microgrid and its Generating Facilities, including but not limited to the requirements specified in the Microgrid Services Tariff, Section H.~~3~~4, that Company reasonably determines are needed to ensure the safe and reliable operation of the Hybrid Microgrid and/or the Company System. Microgrid Operator expressly agrees and irrevocably authorizes Microgrid Operator Agents to disclose such Microgrid data to Company upon request by Company.

15. **Additional Information**. The Company reserves the right to request additional information from Microgrid Operator relating to the Hybrid Microgrid, where reasonably necessary, to serve the Microgrid Operator under this Agreement or to ensure reliability, safety of operation, and power quality of the Company System.

16. **Changes to Hybrid Microgrid Prior to Commencement of Construction**. Microgrid Operator may propose revisions to Exhibit A of this Agreement for Company's approval prior to commencement of construction, provided, however, that (i) no such revision to Exhibit A shall change the type of Hybrid Microgrid or equipment deployed at the Hybrid Microgrid; (ii) Microgrid Operator shall be in compliance with all other terms and conditions of this Agreement and the Microgrid Services Tariff; and (iii) such revision(s) shall not change the characteristics of the Hybrid Microgrid equipment or the specifications used in the Interconnection Requirements Study ("IRS") or other technical review process. Any revision to Exhibit A complying with items (i) through (iii) above shall be subject to Company's prior approval, which approval shall not be unreasonably withheld. If Microgrid Operator's proposed revision(s) to Exhibit A otherwise satisfies items (i) and (ii) above but not item (iii) such that Company, in its reasonable discretion, determines that a re-study or revision to all or any part of the IRS or other technical review is required to accommodate Microgrid Operator's proposed revision(s), Company may, in its sole and absolute discretion, conditionally approve such revision(s) subject to (a) a satisfactory re-study or revision to the IRS or other technical review and (b) Microgrid Operator's payment and continued obligation to be liable and responsible for all costs and expenses of (1) re-studying or revising such portions of the IRS or other technical review, and (2) modifying the Hybrid Microgrid and/or, the Company Interconnection Facilities based on the results of the re-studies or revisions to the IRS or other technical review. Any changes made to Exhibit A or Exhibit B or the Agreement shall be reflected in a written amendment to the Agreement.

Microgrid Operator understands, acknowledges, and agrees that Company's review and approval of Microgrid Operator's proposed revisions to Exhibit A and any necessary re-studies or revisions to the IRS or other technical review shall be subject to Company's then-existing time and personnel constraints. Company agrees to use commercially reasonable efforts, under such time and personnel constraints, to complete any necessary reviews, approvals and/or re-studies or revisions to the IRS or other technical review process.

Any delay in completing, or failure by Microgrid Operator to meet Commercial Operations Date as a result of any revision by Microgrid Operator (whether requiring a re-study or revision to the IRS or not) shall be borne entirely by Microgrid Operator and Company shall not be responsible or liable for any delay or failure to meet Commercial Operations by Microgrid Operator.

17. **No Material Changes to Hybrid Microgrid After Commencement of Construction**. After commencement of construction and thereafter during the Term, Microgrid Operator agrees that no material changes or additions to the Hybrid Microgrid shall be made without having obtained prior written consent from Company, which

consent may be withheld in Company's sole and absolute discretion. Microgrid Operator shall notify Company of any proposed change to the Hybrid Microgrid and provide any further information to Company upon request to determine whether such change will be permitted by Company.

18. **Safety and Performance Compliance/Certification by Licensed Electrical Contractor**. The Hybrid Microgrid, Hybrid Microgrid Facilities, Generating Facilities, and all interconnection systems must comply with all applicable safety and performance standards of the NEC, IEEE, and accredited testing laboratories such as the Underwriters Laboratories (UL), and where applicable, the rules of the Commission, or other applicable governmental laws and regulations, and the Company's interconnection requirements. This requirement shall include, but not be limited to, the interconnection standards and procedures of the Company's Rule 14H, as amended from time to time, as well as any other requirements as may be specified in this Agreement, its exhibits, all as authorized by the Commission. Upon request by Company, Microgrid Operator shall cause a Licensed Electrical Contractor, as agent for Microgrid Operator, to certify that once approved by the Company, the proposed Hybrid Microgrid will be installed to meet all preceding requirement(s).

19. **Good Engineering Practice**.

(a) Each Party agrees to install, operate and maintain its respective equipment and facilities and to perform all obligations required to be performed by such Party under this Agreement in accordance with good engineering practice in the electric industry and with applicable laws, rules, orders and tariffs.

(b) Wherever in this Agreement and the attached Exhibits the Company has the right to give specifications, determinations or approvals, such specifications, determinations and/or approvals shall be given in accordance with the Company's standard practices, policies and procedures, which may include the Company's Electric Service Installation Manual, the Company's Engineering Standard Practice Manual and the IEEE Guides and Standards for Protective Relaying Systems.

20. **Insurance**. The following insurance provisions are applicable to Hybrid Microgrids:

(a) The Microgrid Operator shall, at its own expense and during the term of the Agreement~~ and any other time that the Hybrid Microgrid is Interconnected with the Company System~~, maintain in effect with a responsible insurance company authorized to do insurance business in Hawaii and with a rating by A.M. Best Company, Inc. of "A-VII" or better, the following insurance or its equivalent at Company's discretion that will protect the Microgrid Operator and the Company with respect to the Hybrid Microgrid, the Hybrid Microgrid's operations, and the Hybrid Microgrid's Interconnection with the Company System:

A Commercial General Liability policy covering bodily injury and property damage with a combined single limit of liability of at least FIVE MILLION DOLLARS ($5,000,000) ~~the following amounts based on the Total Rated Capacity of the generator(s) within the Hybrid Microgrid,~~ for any occurrence. The limit~~s below~~ may be satisfied through the use of umbrella or excess liability insurance sufficient to meet these requirements.

~~Commercial General Liability Coverage Amount~~	~~Total Rated Capacity of the Generating Facility(ies) in the Hybrid Microgrid~~
~~X,XXX,XXX~~	~~Greater than 3 MW~~
~~$5,000,000~~	~~Greater than 100 kW and less than or equal to 3 MW~~
~~$2,000,000~~	~~Less than or equal to 100 kW~~

(b) The Microgrid Operator insurance, by endorsement to the policy or policies shall: name the Company, its directors, officers, agents, and employees as additional insured; include contractual liability coverage for written Agreements; include provisions stating that the insurance will respond to claims or suits by additional insureds against the Microgrid Operator or any other insured thereunder; provide that the insurance is primary with respect to the Microgrid Operator and the Company; and provide that the insurance company waives all rights of subrogation which Microgrid Operator or the insurance company may have against Company, its directors, officers, agents, and employees. Any insurance carried by Company will be excess only and not contribute with this insurance.

(c) The Microgrid Operator insurance, by endorsement to the policy or policies shall provide written notice within 30 calendar days to the Company should the required insurance be cancelled, limited in scope, or not renewed upon expiration. "Claims made" policies are not acceptable, unless the Microgrid Operator agrees to maintain coverage in full effect at all times during the term of this Agreement and for three (3) years thereafter. The adequacy of the coverage afforded by the required insurance shall be subject to review by the Company from time to time, and if it appears in such review that risk exposures require an increase in the coverages and/or limits of this insurance, the Microgrid Operator shall make such increase to that extent and any increased costs shall be borne by the Microgrid Operator. The Microgrid Operator has the responsibility to determine if higher limits are desired and purchased. The Microgrid Operator shall provide certificates of insurance to the Company prior to executing the Agreement and any interconnection. Receipt of any certificate showing less coverage than required shall not operate as a waiver by the Company of the Microgrid Operator's obligation to fulfill the applicable requirements of this Section 19. The Microgrid Operator's indemnity and other obligations shall not be limited by the foregoing insurance requirements. Any deductible shall be the responsibility of the Microgrid Operator.

(d) Alternatively, where the Microgrid Operator is a governmental entity, Microgrid Operator may elect to be self-insured for the amounts set forth above in lieu of obtaining insurance coverage to those levels from an insurance company.

21. **House Power**. The Company will sell House Power to the Microgrid Operator under the rate schedule in force for the class of Customer to which the Microgrid Operator belongs. A separate meter to record energy delivered to the Hybrid Microgrid may be installed by the Company and paid for by the Microgrid Operator at the appropriate tariff rate. The Microgrid Operator shall be solely responsible for arranging retail electric service exclusively from the Company in accordance with the Company's Electric Rate Book. The Microgrid Operator shall obtain House Power solely through separately metered retail service and shall not obtain House Power through any other means, and waives any regulatory or other legal claim or right to the contrary. The Parties acknowledge and agree that the performance of their respective obligations with respect to House Power shall be separate from this Agreement and shall be interpreted independently of the Parties' respective obligations under this Agreement. Notwithstanding any other provision in this Agreement, nothing with respect to the arrangements for House Power shall alter or modify the Microgrid Operator's or the Company's rights, duties and obligations under this Agreement. This Agreement shall not be construed to create any rights between the Microgrid Operator and the Company with respect to the arrangements for House Power.

22. **Microgrid Services Tariff**.

(a) Microgrid Operator shall comply with all of the rules stated in the Company's applicable electric tariff rules related to the Microgrid, as the same may be revised from time to time, and this Agreement. In the event of any conflict between the terms of this Agreement and Company's electric tariff rules related to the Microgrid, the provisions of the applicable tariff shall control.

Microgrid Operator shall require all Participants to execute a Participant Agreement as a precondition to enrollment in the Hybrid Microgrid. The Participant Agreement must satisfy the requirements of the

Microgrid Services Tariff, this Agreement and any additional guidance from the Commission. Prior to executing the Participant Agreement, the Microgrid Operator shall make to the Participant the disclosures required under the Disclosure Checklist. A copy of the Disclosure Checklist signed by both the Microgrid Operator and the Participant shall be attached to the executed Participant Agreement. The Microgrid Operator shall also disclose to the Participant that a failure to pay such Participant's monthly retail electric bill that results in Company issuance of a disconnection notice will result in forfeiture of Bill Credits for the duration of such disconnection. For each Participant, a completed and fully-executed Disclosure Checklist must be delivered to the Company prior to the execution of the Hybrid Microgrid Interconnection Agreement, or prior to adding each Participant after Commercial Operations Date.

(b)

~~(b)~~(c) Microgrid Operator Fees. Microgrid Operator shall pay to Company the following fees:

All applicable Interconnection costs, fees and expenses
$5/kW AC Program Administration Fee (annually), from the Commercial Operations Date
Such other fees as the Commission may establish for the Microgrid Systems Program payable by Microgrid Operator

Company shall invoice Microgrid Operator for payment to Company of the foregoing fees. Microgrid Operator shall make payment to Company within 30~~15~~ calendar days of Microgrid Operator's receipt of such invoice.

~~(c)~~(d) Disclosure of Hybrid Microgrid Information. The Microgrid Operator acknowledges and agrees that the Company may publicly disclose the Hybrid Microgrid location, scope, Microgrid Operator, nameplate capacity and generation data of the Hybrid Microgrid.

~~(d)~~(e) Information Requests by Commission. The Microgrid Operator agrees to fully cooperate with any request for information from the Commission pertaining in any way to the Hybrid Microgrid, and will provide such information upon the Company's request in a timely manner.

~~(e)~~(f) Fair Disclosure; Disclosure Checklist. Prior to the time when any person or entity becomes a Participant, the Microgrid Operator will fairly disclose the future costs and benefits of participation and all other matters specified in the Disclosure Checklist and provide to the potential Participant a copy of this Agreement. The Microgrid Operator shall comply with all other requirements of the Commission and applicable laws with respect to communications with Participants.

~~(f)~~(g) Notwithstanding anything to the contrary, Microgrid Operator is solely responsible for resolving any disputes with the Participant during Island-Mode.

~~(g)~~(h) The Company may periodically provide a bill message to Participants with a statement that questions or concerns related to their participation in the Hybrid Microgrid should be directed to the Microgrid Operator.

23. **Requirements Applicable to the Microgrid Operator's Relationship with its Participants**. The Microgrid Operator must comply with the following:

(a) Participant Information. The Microgrid Operator shall only allow participation in the Hybrid Microgrid to Participants and provide to the Company the name, account number and service address attributable to each Participant. The Microgrid Operator shall take care to preserve the privacy expectations of the Participants, such as not publicly providing a Participant's account information, or Bill Credits. The

Microgrid Operator will not disclose or share such information unless the Participant has provided explicit informed consent or if such disclosure is compelled by law.

(b) Participant Transfer of premises. In the event a Participant sells or otherwise transfers the premises which is part of the Hybrid Microgrid, there shall be no transfer charge/fee if the meter associated with the account remains unchanged.

(c) Updating Participant Information. On or before five (5) business days immediately preceding the first Day of each month, the Microgrid Operator shall provide to the Company with any and all changes to the Participant's information , including service address. Such data shall include additions, deletions or changes to the listing of Participants in the Hybrid Microgrid~~, including any changes to the Participant's account number and service address attributable to each Participant~~.

(d) Responsibility for Verification. The Microgrid Operator shall verify that each Participant is eligible to be a Participant in the Hybrid Microgrid and that the Microgrid Services Tariff requirements are met.

24. Microgrid Operator represents, warrants and covenants. Microgrid Operator represents, warrants, and covenants that:

(a) Microgrid Operator has obtained all Land Rights necessary for the construction, ownership, operation and maintenance of the Hybrid Microgrid Facility during the Term, and Microgrid Operator shall maintain such Land Rights in effect throughout the Term.

(b) As of the commencement of construction, Microgrid Operator shall have obtained all permits or approvals from any applicable governmental agency necessary for the construction, ownership, operation and maintenance of the Hybrid Microgrid Facility and all interconnection facilities.

(c) Microgrid Operator's Hybrid Microgrid: (i) complies with all applicable laws concerning the dissemination of personally identifiable information, and shall continue to be in compliance for the longer of (A) the Term or (B) for as long as Microgrid Operator continues to hold or otherwise have access to any personally identifiable information of Participants or Customers of Company; and (ii) complies with all applicable laws concerning consumer protection, and shall continue to be in compliance for the duration of the Term.

25. Miscellaneous.

(a) **Survival of Obligations.** The termination or expiration of this Agreement shall not relieve the Parties of their respective liabilities and obligations, owed or continuing at the time of termination or expiration.

(b) **Governing Law; Regulatory Authority; Jurisdiction; Venue.** This Agreement was executed in the State of Hawaii and must in all respects be interpreted, governed, and construed under the laws of the State of Hawaii, without regard to choice of law principles. This Agreement is subject to, and the Parties' obligations hereunder include, operating in full compliance with all valid, applicable federal, state, and local laws or ordinances, and all applicable rules, regulations, orders of, and tariffs approved by, duly constituted regulatory authorities having jurisdiction. The Parties shall attempt to resolve ~~A~~any dispute arising out of this Agreement, however defined, in accordance with the Dispute Resolution provision in Section 25 (n). All legal proceedings shall be brought in the State of Hawai'i in a court of competent jurisdiction, and each Party agrees and irrevocably consents to the exercise of personal jurisdiction by such courts and waives any right to plead, claim or allege that the State of Hawai'i is an inconvenient forum or improper venue.

(c) **Amendment, Modifications, or Waiver**. This Agreement may not be altered or modified by either of the Parties, except by an instrument in writing executed by each of them. None of the provisions of this

Agreement shall be considered waived by a Party unless such waiver is given in writing. The failure of a Party to insist in any one or more instances upon strict performance of any of the provisions of this Agreement or to take advantage of any of its rights hereunder shall not be construed as a waiver of any such provisions or the relinquishment of any such rights for the future, but the same shall continue and remain in full force and effect. This Agreement contains the entire agreement and understanding between the Parties, their agents, and employees as to the subject matter of this Agreement. Each Party also represents that in entering into this Agreement, it has not relied on any promise, inducement, representation, warranty, agreement or other statement not set forth in this Agreement.

(d) **No Third-Party Beneficiaries**. Nothing expressed or referred to in this Agreement will be construed to give any person or entity other than the parties hereto any legal or equitable right, remedy or claim under or with respect to this Agreement or any provision hereof. This Agreement and all of its provisions and conditions are for the sole and exclusive benefit of Company, Microgrid Operator and their successors and permitted assigns.

(e) **Termination of Existing Agreement**. This Agreement shall supersede any existing agreement, if any, under which Microgrid Operator is currently operating the Hybrid Microgrid and any such agreement shall be deemed terminated as of the date this Agreement becomes effective.

(f) **Notices**. Any notice required under this Agreement shall be in writing and mailed at any United States Post Office with postage prepaid and addressed to the Party, or personally delivered to the Party at the address identified on the last page of the Agreement. Changes in such designation may be made by notice similarly given. Notice sent by mail shall be deemed to have been given on the date of actual delivery or at the expiration of the fifth day after the date of mailing, whichever is earlier.

(g) **Assignment.** This Agreement may not be assigned by either Party without the prior written consent of the other Party. Such consent shall not be unreasonably withheld. Any consent by Company to an assignment by Microgrid Operator, Company may require the new Microgrid Operator to complete and execute an amended Agreement or new Agreement, as may be applicable, as a condition to such consent. In the event of a collateral assignment by Microgrid Operator for financing, to the extent necessary, Company shall, if requested by Microgrid Operator and if its costs (including reasonable attorneys' fees of outside counsel) in responding to such request are paid by Microgrid Operator, execute such Hawai‘i-law-governed documents acceptable to Company in its sole discretion, as may be reasonably requested by a lender in connection with such Hybrid Microgrid financing.

(h) **Binding Effect.** This Agreement shall be binding upon and inure to the benefit of the Parties hereto and their respective successors, legal representatives, and permitted assigns.

(i) **Relationship of Parties**. Nothing in this Agreement shall be deemed to constitute any Party hereto as partner, agent or representative of the other Party or to create any fiduciary relationship between the Parties.

(j) **Limitations**. Nothing in this Agreement shall limit the Company’s ability to exercise its rights or expand or diminish its liability with respect to the provision of electrical service pursuant to the Company's tariffs as filed with the Commission, or the Commission’s Standards for Electric Utility Service in the State of Hawai‘i, which currently are included in the Commission’s General Order Number 7, as either may be amended from time to time.

(k) **Force Majeure**. If a Force Majeure Event prevents a Party from fulfilling any obligations under this Agreement, such Party will promptly notify the other Party in writing, and will keep the other Party informed on a continuing basis of the scope and duration of the Force Majeure Event. The affected Party will specify in reasonable detail the circumstances of the Force Majeure Event, its expected duration, and

the steps that the affected Party is taking to mitigate the effects of the event on its performance. The affected Party will be entitled to suspend or modify its performance of obligations under this Agreement, other than the obligation to make payments then due or becoming due under this Agreement, but only to the extent that the effect of the Force Majeure Event cannot be mitigated by the use of reasonable efforts. The affected Party will use reasonable efforts to resume its performance as soon as possible.

(l) **Non-Warranty**. Neither by inspection, if any, or non-rejection, nor in any other way, does the Company give any warranty, express or implied, as to the adequacy, safety, or other characteristics of any structures, equipment, wires, appliances or devices owned, installed or maintained by the Microgrid Operator or leased by the Microgrid Operator from third parties, including without limitation the Hybrid Microgrid and any structures, equipment, wires, appliances or devices appurtenant thereto.

(m) **Confidential Information**. Each Party may have a proprietary interest or other need for confidentiality in information that may be furnished to the other during the term of this Agreement. As used herein, "Confidential Information" shall include all non-public information disclosed by either Party ("Disclosing Party") to the other Party ("Receiving Party"), whether disclosed orally or in writing, electronically or by other medium, and whether or not marked or otherwise identified as confidential. Confidential information shall be clearly marked as such on each page or otherwise affirmatively identified. Confidential Information shall not include information if and to the extent the Receiving Party establishes that the information: (i) is part of the public domain through no act or omission of the Receiving Party; or (ii) came into the Receiving Party's lawful possession outside of the performance of this Agreement and through means other than the Disclosing Party.

The Receiving Party agrees that it will exercise at least the same standard of care in protecting the confidentiality of the Disclosing Party's Confidential Information as it does with its own confidential information of a similar nature, but in any event, no less than reasonable care. The Receiving Party will hold in confidence and will not use, reproduce, distribute, transmit or disclose, directly or indirectly, the Disclosing Party's Confidential Information except as permitted herein or as consented to in writing by the Disclosing Party.

The Receiving Party may disclose Confidential Information to its officers, directors, employees, professional advisors and independent contractors with a direct need to know the information for the exercise of rights and/or performance of obligations under this Agreement; provided, however, such persons or entities must be bound by written confidentiality agreements with terms and conditions that are no less restrictive than those contained herein. Confidential Information may also be disclosed by the Receiving Party pursuant to a requirement of a governmental agency, regulatory body or by operation of law; provided, however, the Receiving Party shall disclose only that portion of the Confidential Information that it is required to disclose and shall (if permitted) notify the Disclosing Party prior to such disclosure in order to permit the Disclosing Party to lawfully attempt to prevent or restrict such disclosure should it so choose. Finally, Company may disclose Confidential Information, as necessary and appropriate, to the State of Hawai'i Public Utilities Commission and/or State of Hawai'i Consumer Advocate (including their respective staffs) provided that such disclosure is made under a protective order entered in the docket or proceeding with respect to which the disclosure will be made or any general protective order otherwise applicable to the disclosure.

(n) **Dispute Resolution.** Each Party agrees to attempt to resolve all disputes arising hereunder promptly, equitably and in a good faith manner.

(i) Any dispute regarding the application of Tariffs or Rules may be submitted to the Commission to be resolved. If a Party disagrees with the Commission decision, then appeals may be taken in the manner and in the time provided by the Hawaii Revised Statutes and the Rules of Practice and Procedure before the Public Utilities Commission.

(ii) If any dispute other than in Sec. 25(n)(i) arises between the Parties which cannot be resolved by the Parties within thirty (30) Days after written notice of the dispute to the other Party, then the dispute may, upon the agreement of the Parties, first be submitted to confidential mediation in Honolulu, Hawai‘i pursuant to the administration by, and in accordance with the Mediation Rules, Procedures and Protocols of, Dispute Prevention & Resolution, Inc. (or its successor) or, in their absence, the American Arbitration Association ("DPR") then in effect. If the Parties agree to submit the dispute to confidential mediation, the Parties shall each pay 50% of the cost of the mediation (i.e., the fees and expenses charged by the mediator and DPR) and shall otherwise each bear their own mediation costs and attorneys' fees. If the Parties do not submit the dispute(s) to mediation, or if they do submit the dispute(s) to mediation but settlement of the dispute(s) is not reached within 60 Days after commencement of the mediation, then either Party may initiate legal proceedings in a court of competent jurisdiction in the State of Hawai‘i.

~~(m)~~(o) **Execution of Agreement; Multiple Counterparts**. The Parties agree that this Agreement, including amendments, may be executed and delivered by exchange of electronic signatures, which may be transmitted by facsimile, E-mail, or other acceptable means. A P~~p~~arty’s electronic signature shall be considered an "original" signature which is binding and effective for all purposes. This Agreement may be executed in counterparts, each of which shall be deemed an original, and all of which shall together constitute one and the same instrument binding all Parties.

IN WITNESS WHEREOF, the Parties hereto have caused two originals of this Agreement to be executed by their duly authorized representatives. This Agreement is effective as of the date first set forth above.

[MICROGRID OPERATOR]

By: _____ _____
Signature Date

Name (Print): _____

Company Name
(if applicable): _____

Title (if applicable): _____

[HAWAIIAN ELECTRIC COMPANY, INC., MAUI ELECTRIC COMPANY LTD., HAWAI'I ELECTRIC LIGHT COMPANY, INC.]

By: To be filled out by the Company To be filled out by the Company
Signature Date

Name (Print): To be filled out by the Company

Title: To be filled out by the Company

MAILING ADDRESS [select as appropriate]

[Hawaiian Electric Company, Inc.
_____ Division
P.O. Box 2750
Honolulu, HI 96840]

[Maui Electric Company, Ltd.
Attn: _____
P.O. Box 398
Kahului, HI 96733-6898]

[Hilo:
HELCO Engineering
Attn: Hybrid Microgrid Program
54 Halekauila Street
Hilo, HI 96720

Kona:
HELCO Engineering
Attn: Hybrid Microgrid Program
74-5519 Kaiwi Street
Kailua-Kona, HI 96740]

Sheet No. XX
Effective X

EXHIBIT A

DESCRIPTION OF HYBRID MICROGRID

1. Microgrid Operator Information

Name (print): _____

Property Address: _____

City:_____ State:_____ Zip: _____

Meter # (if applicable):_____TMK: _____

Phone:_____Cell:_____ Email: _____

☐ Mailing Address is the same as the Property Address

Mailing Address: _____

City: State: Zip:

Name of Person Authorized to Sign on behalf of Microgrid Operator:
_____

Hawaii Gross Excise Tax License Number of Microgrid Operator:
_____

Description of the electrical boundaries of the Hybrid Microgrid:

_____
_____
_____
_____(use additional sheet if necessary)

2. Electrical Contractor

Electrical Contractor:_____Hawai`i License #: _____

Mailing Address: _____

City:_____ State:_____ Zip: _____

Phone:_____Cell:_____ Email: _____

Supply certification that the generating system will be installed and inspected in compliance with the local Building/Electrical code of the County of: Honolulu Maui Hawai`i

Generating System Building Permit # (to be filled out by the Company upon the Company's approval and execution of Agreement): To be filled out by the Company

Interconnection Date (to be filled out by the Company upon the Company's approval and execution of the Agreement): To be filled out by the Company

3. Insurance

Insurance Carrier: _____

4. General Hybrid Microgrid Technical Information (Attached)

The attached technical information should clearly describe and illustrate the defined electrical boundaries of the proposed Hybrid Microgrid.

☐ **Microgrid Single Line Diagram**

☐ **Microgrid Three Line Diagram**

☐ **Microgrid Relay List and Trip Scheme** (if applicable)

☐ **Map Showing Defined Electrical Boundaries**

5. Generator Qualifications

Generator Type(s) included in Hybrid Microgrid:

☐ Photovoltaic with DC Inverter ☐ Non-Photovoltaic DC Generator ☐ Other: _____

~~Hybrid Microgrid Maximum Export in Grid-Connected Mode: _____kW~~

Total aggregate rated capacity of the Hybrid Microgrid: Grid-Connected Mode _____kW Island Mode: ____kW

Total energy capability over a 24-hour period of the Hybrid Microgrid: Island Mode____ kWh

Estimated peak demand of the Hybrid Microgrid: Grid-Connected ____kW Island Mode ____kW

6. Interconnecting Equipment Technical Data

Equipment Information:

Manufacturer:_____ Catalog #: _____
_____

Type: _____ Rated Amps: _____ Rated Volts: _____

☐ Fused *or* Non-Fused | Single Phase *or* Three Phase | Uses multiple disconnects

Mounting Location:

7. Generator Facility Technical Information for Generating Facilities utilized during Island Mode System Information:

Generator Technology	Manufacturer	Model	Interconnection Application No.	Location (Service Address)	Peak AC Output Rating (kW)
				Total Rated Capacity (kW):	

8. Reserved ☐ Not Applicable

9. Interconnecting Equipment Technical Data

Transformer Data — Not Applicable

A copy of transformer Nameplate and Manufacturer's Test Report may be substituted

Transformer Primary (Volts): _____ | Transformer Secondary (Volts): _____

☐ Delta Wye Wye Grounded | Delta Wye Wye Grounded

Size: _____ KVA Transformer Impedance: _____ % on _____ KVA Base

Transformer Fuse Data — Not Applicable

Attach fuse manufacturer's Minimum Melt & Total Clearing Time-Current Curves

☐ At Primary Voltage At Secondary Voltage

Manufacturer: _____ Type: _____ Size: _____ Speed: _____

Transformer Protection (if not fuse) — Not Applicable

Please describe: _____

Generator Main Circuit Breaker — Not Applicable

A copy of circuit breaker's Nameplate and Specification Sheet may be substituted

Manufacturer: _____ Type: _____

Continuous Load Rating (Amps): _____ Interrupting Rating (Amps): _____ Trip Speed (Cycles): _____

Feeder Circuit Breaker — Not Applicable

Attach copy of any proposed Time-Overcurrent Coordination Curves

Manufacturer	Type	Style/Catalog No.	Proposed Setting

Current Transformer Data — ☐ Not Applicable

Attach copy of Manufacturer's Excitation & Ratio Correction Curves

Manufacturer	Type	Accuracy Class	Proposed Ration
			/5
			/5
			/5
			/5
			/5

Protection Devices — ☐ Not Applicable

Interconnection Location (Service Address)	Nearest Customer Protective Device Type	Manufacturer	Model

Generator Reactive Capability Curve (if available) ☐ Not Applicable

Attach copy of Generator Reactive Capability Curve

10. Feasibility Analysis

Applicant elects to pursue a Feasibility Analysis with the Company pursuant to the Microgrid Services Tariff: Yes No

EXHIBIT B

HYBRID MICROGRID ~~OPERATOR-OWNED GENERATING FACILITY AND~~ INTERCONNECTION FACILITIES

Microgrid Operator agrees to furnish, install, operate, and maintain the Facility in accordance with the provisions of this Agreement, including, without limitation, the operating procedures and performance standards described in this Exhibit B (Hybrid Microgrid Interconnection Facilities). After the Commercial Operations Date, Microgrid Operation agrees that no changes or additions to the Hybrid Microgrid shall be made without prior written approval by Company and amendment to the Agreement unless such changes or additions to the Hybrid Microgrid could not reasonably be expected to have a material effect on the assumptions used in performing the Interconnection Requirements Study.

1. Hybrid Microgrid

a. Compliance with laws and standards.

(i) The Hybrid Microgrid design and drawings shall meet all applicable national, state, and local laws, rules, regulations, orders, construction and safety codes, and shall satisfy the terms of the Interconnection Agreement, the parameters described in Exhibit F (Hybrid Microgrid Operating Parameters), the Microgrid Services Tariff Rule No. XX, and Rule 14H.

(ii) This Agreement incorporates by reference the standards and requirements of Company Rule 14H; however, in the event of any conflict between this Agreement and Company Rule 14H, the provisions of this Agreement shall control.

b. Avoidance of adverse system conditions. The portions of the Hybrid Microgrid supplied and installed by the Microgrid Operator ~~Hybrid Microgrid~~ shall be designed, installed, ~~operated~~ and maintained and operated in conjunction with the portions provide by the Company so as to prevent or protect against adverse conditions on the Company System that can cause electric service degradation, equipment damage, or harm to persons, such as:

(i) Unintended islanding.
(ii) Inadvertent and unwanted re-energization of a Company dead line or bus.
(iii) Interconnection while out of synchronization.
(iv) Overcurrent.
(v) Voltage imbalance.
(vi) Ground faults.
(vii) Generated alternating current frequency outside of permitted safe limits.
(viii) Voltage outside permitted limits.
(ix) Poor power factor or reactive power outside permitted limits.
(x) Abnormal waveforms.

c. Specification of protection, synchronizing and control requirements. The Microgrid Operator shall provide the design drawings, operating manuals, manufacturer's brochures/instruction manual and technical specifications, manufacturer's test reports, bill of material, protection and synchronizing relays and settings, and protection, synchronizing, and control schemes for the Hybrid Microgrid to the Company for its review, and the Company shall have the right to specify the protection and synchronizing relays and settings, and protection, synchronizing and control schemes that affect the reliability and safety of operation and power quality of the Company System with which the Hybrid Microgrid is Interconnected.

All protective devices described in the Exhibit B shall be utility-grade protective equipment that meets the requirements defined by: (1) ANSI/IEEE C37.90-1989 IEEE Standards for Relays and Relay Systems Associated with Electric Power Apparatus; (2) IEEE C37.90.1 IEEE Standard Surge Withstand Capability (SWC) Tests for Protective Relays and Relay Systems'; and (3) IEEE C37.90.2 IEEE Trial-Use Standard Withstand Capability of Relay Systems to Radiated Electromagnetic Interference from Transceivers

(i) Protection at Microgrid PCC: Microgrid shall have dedicated protection scheme associated with PCC which, as a minimum, include protection elements such as over/under voltage, over/under frequency, directional overcurrent, and sync-check. The protection schemes shall be associated with a means for automatically disconnecting the Microgrid from the Company System whenever a protective device initiates a trip, or whenever a remote transfer trip signal is received (issued through designated Company protection schemes or other Microgrid control schemes).

(ii) Means of Disconnection and Isolation at PCC: Microgrid shall be equipped with a means of disconnecting the Microgrid area from the Company System at PCC (i.e., switch, circuit breaker, or recloser) to properly provide a galvanic isolation between the Company grid and the Microgrid prior to entering Island Mode. The PCC means of disconnect shall be able to tolerate two times the nominal voltage at PCC, due to possible 180 degree out of sync operation of the Microgrid and the rest of the Company System.

(iii) Synchronization at PCC: Microgrid shall have a means of synchronizing at PCC prior to re-connection and restoration from an Island Mode. The criteria outlined in IEEE 1547-2018 for synchronization based on the aggregate size of Generating Facility shall be applied (e.g.: $\Delta f \leq 0.1$ Hz, $\Delta V \leq 3\%$, and Δ angle ≤ 10 deg, for a Generating Facility size of 1.5 MW ~~to~~ and above~~3 MW~~).

(a) Resynchronization. Under no circumstances shall Microgrid Operator, when separated from the Company System for any reason, reclose into the Company System without first obtaining specific approval to do so from the Company System operator.

(iv) Protection Schemes: The Microgrid Operator shall provide comprehensive short circuit and protection coordination studies with documentation on protection design of the Microgrid for both Grid-Connected and Island Mode to ensure proper fault detection and clearing scheme. Due to significant change in short circuit level of the Microgrid from one mode to another, advanced and adaptive protection schemes shall be used. The Generating Facilities in the Microgrid and all protection devices associated with the Microgrid shall have the capability of applying multiple setting groups that are pre-defined and automatically selected based on the short circuit levels and protection coordination requirements of each Microgrid mode (e.g. both Grid-Connected and Island Mode).

(v) Effective Grounding for Island Mode: Microgrid shall have dedicated grounding system independent of the Company System ground (that is typically on the Company grid side) to ensure that all areas within the Microgrid boundary are effectively grounded, when operating in Island Mode. The transformer configurations for the

Generating Facility shall be reviewed and proper means of grounding for the Island Mode shall be incorporated.

(vi) Load following capability and Microgrid stability in Island Mode: Generating Facility within a Microgrid shall be designed ~~able~~ to quickly respond to changes in loads and regulate the voltage and frequency of the island within +/- 10% ΔV, +/- 0.5 Hz Δf, and to ~~shall~~ maintain a maximum of 3 Hz/second rate of change of frequency (ROCOF) in all situations. The criteria are specified in IEEE 1547-2018. The maximum (worst case) expected step load change to meet these conditions for the Island Mode shall be pre-determined and agreed upon between the Company and the Microgrid Operator, as part of the design process. The voltage, frequency, and ROCOF regulation criteria are also required during a load restoration process in a black-start mode, following a break-before-make transition from Grid Connected Mode to an Island Mode, for the agreed level of maximum step load change during restoration. Load sectionalizing schemes shall be applied to restore load in multiple steps if the Microgrid Generating Facility cannot meet the voltage and frequency requirements for picking up the entire load in one shot.

(vii) Unbalance load condition: The Generating Facilities within a Microgrid shall be able to tolerate up to 30% unbalance load level among three phases in Island Mode. The unbalance condition may cause de-rating of certain Generating Facilities.

(viii) Under Frequency Load Shedding (UFLS): During Island Mode operation, the Microgrid may include UFLS to support Microgrid stability and frequency restoration if there is a possibility of sudden loss of generation or step load change beyond pre-determined values.

(ix) Black Start: Microgrid may have provisions for black start to initiate Microgrid in Island Mode from de-energized state by starting available Generating Facilities and picking up the load either in different stages or at once depending on load serving capability of Generating Facilities.

(x) Microgrid Supervisory Control: A Hybrid Microgrid shall be equipped with a Microgrid supervisory control that meets the requirements of IEEE 2030.7 and IEEE 2030.8 standards for Microgrid controller design and testing. The supervisory controller manages the operation of all controllable resources in the Microgrid, and also coordinate the disconnection and reconnection of the Hybrid Microgrid from/to the Company System. Certain automation schemes associated with Microgrid boundary may also be managed and initiated by a Microgrid controller (e.g. reconfiguration of topology and connect/disconnect loads).

d. Certain Specifications for the Hybrid Microgrid Facility.

(i) The Hybrid Microgrid shall comply with the following:

A. Microgrid Operator shall install a ____ kV disconnect switch and all other items for its switching station (relaying, control power transformers, high voltage circuit breaker). Bus connection shall be made to a manually and automatically (via protective relays) operated high-voltage circuit breaker. The high-voltage circuit breaker shall be fitted with bushing style current transformers for metering and relaying. Downstream of the high-voltage circuit breaker, a

structure shall be provided for metering transformers. From the high-voltage circuit breaker, another bus connection shall be made to another pole mounted disconnect switch, with surge protection.

B. If applicable, Microgrid Operator shall provide within the Microgrid Operator Interconnection Facilities a separate, fenced area with separate access for Company. Microgrid Operator shall provide all conduits, structures and accessories necessary for Company to install a metering package if needed. Microgrid Operator shall also provide within such area, space for Company to install its communications, SCADA, RTU, and certain relaying if necessary for the Interconnection. Microgrid Operator shall also provide AC and DC source lines as specified later by Company. ~~Microgrid Operator shall provide a telephone line for Company-owned meters.~~ Microgrid Operator shall work with Company to determine an acceptable location and size of the fenced-in area. Microgrid Operator shall provide an acceptable demarcation cabinet on its side of the fence where Microgrid Operator and Company wiring will connect/interface.

C. Microgrid Operator shall ensure that the Microgrid Operator Interconnection Facilities have a lockable cabinet for switching station relaying equipment. Microgrid Operator shall select and install relaying equipment acceptable to Company. At a minimum the relaying equipment will provide over and under frequency (81) negative phase sequence (46), under voltage (27), over voltage (59), ground over voltage (59G), over current functions (50/51) and other protection elements as required by this Exhibit B. Microgrid Operator shall install protective relays that operate a lockout relay, which in turn will trip the main circuit breaker.

E. Microgrid Operator's equipment also shall provide at a minimum: **[NOTE: ADDITIONAL ITEMS AND DETAILS MAY BE ADDED PRIOR TO EXECUTION OF AGREEMENT UPON COMPLETION OF TECHNICAL REVIEW.]**

(i) Interface with Company's RTU to provide telemetry of electrical quantities as identified by the Company;

(ii) Interface with Company's RTU to provide status of devices, as identified by the Company;

(iii) Interface with Company's RTU to provide control to incrementally raise and lower the voltage target at the point of regulation operating in automatic voltage regulation control. If Company's RTU is unavailable, due to loss of communication link, RTU failure, or other event resulting in loss of the remote control by Company, provision must be made for Microgrid Operator to be able to institute via local controls, within 30 minutes (or such other period as Company accepts in writing) of the verbal directive by the Company System operator, such change in voltage regulation target as directed by the Company System operator; and

(ii) Interface with Company's RTU to provide active power control to incrementally limit net real power export from the Hybrid Microgrid and to incrementally remove the limit of the net real power export of the Hybrid Microgrid. The incremental size will be

determined as part of the technical review taking into account the size of the Hybrid Microgrid and the dynamic system frequency bias.

e. Maintenance Plan. Microgrid Operator shall maintain Microgrid Operator Interconnection Facilities in accordance with the following maintenance plan:

Distribution line: _____

___ kV Facility switching station:
_____

Relay protection equipment: _____

Other equipment as identified: _____

Microgrid Operator shall furnish to Company a copy of records documenting such maintenance, within thirty (30) calendar days of completion of such maintenance work.

f. Communications and Control Interface.

(i) The acceptable method(s) of implementing the Hybrid Microgrid's telemetry and control interface ("Communications and Control Interface") requirements will be specified by the Company. The Hybrid Microgrid will require a supervisory control interface to the Company SCADA/EMS system. Company shall review and provide prior written approval of the design for the Communications and Control Interface to ensure compatibility with Company System. If Microgrid Operator materially changes the approved design, such changes will also require Company's review and prior written approval.

A. The Microgrid Operator shall provide and maintain in good working order all equipment, necessary to interface the Hybrid Microgrid with the Company System. The Communications and Control Interface shall provide for remote monitoring and control of the real-power output of the Hybrid Microgrid by Company at all times. If the Communications and Control Interface is unavailable, disabled, or otherwise not performing the required capabilities, or if a required protection scheme is unavailable for any reason, including due to loss of communication link or other event resulting in the loss of the remote control by the Company, then the Hybrid Microgrid shall remain in the operating mode present prior to the unavailability of the Communication and Control Interface (i.e., Grid-Connected or Island Mode) until the Communications and Control interface is fully restored, unless Microgrid Operator and Company agree on an alternate means of control. Notwithstanding the foregoing, if Microgrid Operator fails to provide such remote control features (whether temporarily or throughout the term of this Agreement) and fails to remain in its last operating state prior to the unavailability of the Communication and Control Interface, then, notwithstanding any other provision of this Agreement, Company shall have the right to disable the operation of the entire Hybrid Microgrid (and its Generating Facilities) during those periods that such control features are not provided. .

B. Microgrid Operator shall not override Company's active power controls without first obtaining specific approval to do so from the Company System operator.

(ii) The requirements of the Communications and Control Interface may be modified as mutually agreed upon in writing by the Parties.

g. Control System Acceptance Test Procedures.

(i) Conditions Precedent. The Hybrid Microgrid will be required to complete a Control System Acceptance Test ("CSAT"). The "CSAT" is a test performed on the centralized control system of the Hybrid Microgrid in accordance with the procedures set forth in Exhibit E, attached hereto. Each and all of the following conditions precedent must be satisfied prior to the conduct of the CSAT:

- Successful Completion of the acceptance test. The acceptance test is a test conducted by Microgrid Operator and witnessed by Company, within thirty (30) calendar days of completion of all interconnection facilities and in accordance with the criteria and procedures determined by Company and Microgrid Operator as set forth in Schedule II to Exhibit E
- The Hybrid Microgrid has been successfully energized.
- All of the Hybrid Microgrid's generators have been fully commissioned.
- The control system computer has been programmed for normal operations.
- All equipment that is relied upon for normal operations (including ancillary devices such as capacitors/inductors, energy storage device, statcom, etc.) shall have been commissioned and be operating within normal parameters.

(ii) Hybrid Microgrid Generators. Unless all of the Hybrid Microgrid's generators are available for the duration of the CSAT, the CSAT will have to be re-run from the beginning unless Microgrid Operator demonstrates to the satisfaction of the Company that the test results attained with less than all of the Hybrid Microgrid's generators are consistent with the results that would have been attained if all of the Hybrid Microgrid's generators had been available for the duration of the test.

(iii) Procedures. The CSAT will be conducted on business days during normal working hours on a mutually agreed upon schedule. No CSAT will be scheduled during the final 21 calendar days of a calendar year. No later than thirty (30) calendar days prior to conducting the CSAT, Company and Microgrid Operator shall agree on a written protocol setting out the detailed procedure and criteria for passing the CSAT. Schedule III to Exhibit E provides general criteria to be included in the written protocol for the CSAT. Within fifteen (15) business days of completion of the CSAT, Company shall notify Microgrid Operator in writing whether the CSAT(s) has been passed and, if so, the date upon which such CSAT(s) was passed. If any changes have been made to the technical specifications of the Hybrid Microgrid or the design of the Hybrid Microgrid in accordance with this Exhibit B, such changes shall be reflected in an amendment to this Agreement, and the written protocol for the CSAT shall be based on the Hybrid Microgrid as modified. Such amendment shall be executed prior to conducting the CSAT and Company shall have no obligation for any delay in performing the CSAT due to the need to complete and execute such amendment.

2. Performance Standards.

a. Reactive Power Control. Microgrid Operator shall control its reactive power by automatic voltage regulation control. Microgrid Operator shall automatically regulate voltage at a point,

the point of regulation, between the Microgrid Operator's generator terminal and the point of interconnection ("POI") to be specified by Company, to within 0.5% of a voltage specified by the Company System operator to the extent allowed by the Hybrid Microgrid reactive power capabilities as defined in this Section 5(b) of this Section. **[NOTE: FOR FACILITIES CONNECTED TO THE DISTRIBUTION SYSTEM, THESE REQUIREMENTS MAY BE CHANGED BY COMPANY UPON COMPLETION OF THE TECHNICAL REVIEW.]**

b. Reactive Amount.

(i) Microgrid Operator shall install sufficient equipment so that each Generating Facility part of the Hybrid Microgrid will have the ability to deliver or receive, at its terminal, reactive power as illustrated in the **[generator capability]** curve[s] attached to this Agreement by the Microgrid Operator. (Generator Capability Curve(s)). **[NOTE: THE TECHNICAL REVIEW WILL DETERMINE IF ANY ADDITIONAL REACTIVE POWER RESOURCES WILL BE REQUIRED.]**

(ii) The Hybrid Microgrid shall contain equipment able to continuously and actively control the output of reactive power under automatic voltage regulation control reacting to system or Microgrid voltage fluctuations. The automatic voltage regulation response speed at the point of regulation shall be such that at least 90% of the initial voltage correction needed to reach the voltage control target will be achieved within 1 second following a step change.

(iii) If the Hybrid Microgrid does not operate in accordance with this Section 2(b), Company may disconnect all or a part of the Hybrid Microgrid from Company System until Microgrid Operator corrects its operation (such as by installing capacitors at Microgrid Operator's expense).

c. Ramp Rates.

Microgrid Operator shall ensure that the ramp rate of the aggregate of the Hybrid Microgrid is less than the following limits for all conditions including start up, normal operations, curtailing and uncurtailing, Microgrid Operator adjusting the Hybrid Microgrid's net real power export, changes in the solar resource, and shut down for the following periods as calculated in accordance with Schedule I to this Exhibit E.

- Maximum Ramp Rate Upward of [ ] MW/minute for all periods. [TO BE DETERMINED FOLLOWING Technical Review.]

Maximum Ramp Rate Downward of [ ] MW/minute for all periods other than periods for which such maximum is not operationally possible because of rapid loss of solar resource. ~~The Facility start-up ramp rate shall be _____ MW/min. The Facility shutdown ramp rate shall be _____ MW/min.~~ [Ramp rates will be set equal to (Total Rated Capacity of the Microgrid / 3 MW) x 2 MW/min.]

~~Ramp rates shall be calculated in accordance with Schedule I attached to Exhibit E.~~

d. Undervoltage Ride-Through. See Rule 14H

e. Over Voltage Ride-Through. See Rule 14H.

f. Underfrequency ride-through. See Rule 14H.

g. Overfrequency ride-through. See Rule 14H.

h. Voltage Flicker.

Any voltage flicker on the Company System caused by the Hybrid Microgrid shall not exceed the limits stated in IEEE Standard 1453-2015, or latest version "Recommended Practice – Adoption of IEC 61000-4-15:2010, Electromagnetic compatibility (EMC) – Testing and measurement techniques – Flickermeter – Functional and design specifications".

i. Harmonics.

Harmonic distortion at the POI caused by the Facility shall not exceed the limits stated in IEEE Standard 519-2014, or latest version "Recommended Practices and Requirements for Harmonic Control in Electrical Power Systems". Microgrid Operator shall be responsible for the installation of any necessary controls or hardware to limit the voltage and current harmonics generated from the Facility to defined levels.

j. Frequency Response.

The Hybrid Microgrid shall provide a primary frequency response with a frequency droop characteristic reacting to system frequency fluctuations at the POI in both the overfrequency and underfrequency directions except to the extent such response is not operationally possible because of the level of available solar resource.

(i) The Hybrid Microgrid frequency response control shall adjust, without intentional delay and without regard to the ramp rate limits in this Section 2(c), the Hybrid Microgrid's net real power export when system frequency is not 60 Hz based on frequency deadband and frequency droop settings specified by the Company.

(ii) The frequency deadband shall be settable in the range from +/-0.01 Hz to +/-0.10 Hz and the frequency droop shall be settable in the range of 0.1% to 10%.

(iii) The Hybrid Microgrid frequency response control shall be in continuous operation when the Hybrid Microgrid is exporting energy to the Company unless directed otherwise by the Company.

k. Hybrid Microgrid Protection and Maintenance.

(i) The Microgrid Operator is solely responsible for securing and providing adequate protection for the Hybrid Microgrid. The Microgrid Operator shall also perform vegetation management and other routine maintenance in accordance with manufacturer recommendations and intervals for purposes of maintaining the Hybrid Microgrid in good working order. Microgrid Operator shall comply with all commercially reasonable requests of Company to update security and/or maintenance if required to prevent security breaches.

(ii) By the first day of each calendar quarter following the Commercial Operations Date, Microgrid Operator shall provide the Company in writing a projection of maintenance outages for the next calendar quarter. If, during the term of this Agreement, the Hybrid Microgrid or any of the individual components of the Hybrid Microgrid should be damaged or destroyed, or taken out of service for unscheduled maintenance, the Microgrid Operator shall provide the Company as soon as reasonably practicable following or in anticipation of such event, and promptly repair or replace the damaged or destroyed equipment at the Microgrid Operator's sole expense. Microgrid Operation shall complete the necessary repair, replacement or maintenance to Company's reasonable satisfaction, including necessary testing of controls, within ninety (90) calendar days.

l. Information Security Requirements.

(i) Safety and Security Procedures. The Microgrid Operator shall maintain and enforce safety and security procedures to safeguard: all Company Confidential Information; all generation and telemetry data provided by the Microgrid Operator to the Company; in Microgrid Operator's possession, including Company Confidential Information that Microgrid Operator provides to any contractors, consultants, and other third parties retained by Microgrid Operator to assist Microgrid Operator to perform under this Agreement in the course of Microgrid Operator's performance pursuant to this Agreement. Microgrid Operator warrants that it shall (A) follow NIST industry best practices for physical and systems security measures to prevent destruction, loss, alteration or unauthorized access to, use of, or tampering with, the Hybrid Microgrid, Microgrid Operator software, and Company Confidential Information, including to protect the confidentiality and integrity of any of Company Confidential Information, operation of Company System, and to prevent viruses and similar destructive code from being placed in any software or data provided to Company, on Microgrid Operator's or Company's website, or in Microgrid Operator's or Company's programming; and (B) use NIST industry best practices physical security and precautionary measures to prevent unauthorized access or damage to the Hybrid Microgrid, including to protect the confidentiality and integrity of any of Company's Confidential Information as well as the operation of Company System. Microgrid Operator shall, at a minimum, protect Company's Confidential Information and provide the standard of care required by NIST cybersecurity requirements, and the same measures it uses to protect its own confidential information.

(ii) Exception to Certain NIST Requirements. Company, at its sole and absolute discretion, may waive the requirements concerning NIST industry best practices as set forth in subsection (i)(A) and (B) above provided that Microgrid Operator implements alternate measures that Company deems acceptable and not inconsistent with Company's standards with respect to (A) physical and systems security measures to prevent destruction, loss, alteration or unauthorized access to, use of, or tampering with, the Hybrid Microgrid, software and Company's Confidential Information, including to protect the confidentiality and integrity of any of Company's Confidential Information, operation of Company System, and to prevent viruses and similar destructive code from being placed in any software provided to Company, on Microgrid Operator's or Company's website, or in Microgrid Operator's or Company's programming; and (B) physical security and precautionary measures to prevent unauthorized access or damage to the Hybrid Microgrid, including to protect the

confidentiality and integrity of any of Company's Confidential Information as well as the operation of Company System.

(iii) Security Breach.

- In the event that Microgrid Operator discovers or is notified of a Security Breach, Microgrid Operator shall immediately (i) notify Company of such Security Breach, whether or not such breach has compromised any of Company Confidential information, (ii) investigate and remediate the effects of the Security Breach, (iii) cooperate with Company with respect to any such Security Breach and provide necessary information on the Security Breach as requested by Company; and (iv) comply with all applicable privacy and data protection laws, including any notification obligations. Any remediation of any Security Breach will be at Microgrid Operator's sole expense.

m. Microgrid Operator Interconnection Facilities.

(i) The Microgrid Operator shall furnish, install, operate and maintain Microgrid Operator Interconnection Facilities. Such facilities shall be accessible at all times to authorized Company personnel.

(ii) The Microgrid Operator shall comply with the Company's Interconnection Standards.

(iii) Single-line diagram of the Hybrid Microgrid; relay list, trip scheme and settings of the Hybrid Microgrid; Hybrid Microgrid equipment list; and three-line diagram, which identify the circuit breakers, relays, switches, synchronizing equipment, monitoring equipment, and control and protective devices and schemes, shall, after having obtained prior written consent from the Company, be attached to Exhibit A and made a part hereof at the time the Agreement is signed. The single-line diagram shall include pertinent information regarding operation, protection, synchronizing, control, monitoring, and alarm requirements. The single-line diagram and three-line diagram shall expressly identify the POI of the Hybrid Microgrid to the Company System. The relay list, trip scheme and settings shall include all protection, synchronizing and auxiliary relays that are required to operate the Hybrid Microgrid in a safe and reliable manner. The three-line diagram shall show potential transformer and current transformer ratios, and details of the Hybrid Microgrid's configuration, including relays, meters, and test switches.

(iv) Microgrid Operator shall provide final as-built drawings of the Microgrid Operator Interconnection Facilities within thirty (30) calendar days of the successful completion of the initial verification test. Within thirty (30) calendar days of Company's receipt of the proposed as-built drawings, Company shall provide Microgrid Operator with either (A) its comments on the proposed as-built drawings or (B) notice of acceptance of the proposed as-built drawings as final as-built drawings. If Company provides comments on the proposed as-built drawings, Microgrid Operator shall incorporate such comments into a final set of as-built drawings and provide such final as-built drawings to Company within twenty (20) calendar days of Microgrid Operator's receipt of Company's comments.

n. Approval of Design Drawings. The single-line diagram, relay list, trip scheme and settings of the Hybrid Microgrid, and three-line diagram shall be approved by a Professional Electrical Engineer registered in the State of Hawaii prior to being submitted to the Company. Such approval shall be indicated by the engineer's professional seal on all drawings and documents.

o. [Reserved]

p. Schedule. The Company and the Microgrid Operator have agreed upon on a schedule for the progression of the Hybrid Microgrid's construction (e.g., construction start date, Commercial Operations Date, etc.) and each Party has a copy of such schedule and agrees to use commercially reasonable efforts to adhere to such schedule.

3. Verification Testing.

a. Upon initial Grid-Connected operation of the Hybrid Microgrid, or any time either (i) interface hardware or software is changed, or (ii) the Company observes that the Microgrid Operator is not in compliance with the operational and performance requirements specified in the Company's Rule 14H and/or this Agreement, a verification test shall be performed. Such verification test shall include testing of the telemetry and control interface which allows the Company to remotely measure, monitor, evaluate and verify technical compliance, Hybrid Microgrid performance, and power quality and, if necessary, control the Hybrid Microgrid. A licensed professional engineer or otherwise qualified individual shall perform verification testing in accordance with the manufacturer's published test procedure. Qualified individuals include professional engineers, factory trained and certified technicians, and licensed electricians with experience in testing protective equipment. The Company reserves the right to witness verification testing or require written certification that the testing was performed.

b. If Interconnection Agreement is extended, v~~V~~erification testing shall also be performed every five~~our~~ years. The Company reserves the right to perform, at its expense, additional verification testing. All verification tests prescribed by the manufacturer shall be performed. If wires must be removed to perform certain tests, each wire and each terminal shall be clearly and permanently marked. The Microgrid Operator shall maintain verification test reports for inspection by the Company.

c. Any Hybrid Microgrid that depends upon a battery to operate any breakers, switches, or any other equipment critical to the operation of the Microgrid shall be checked once per month for proper voltage. Upon extension of the Interconnection Agreement, the ~~Once every four (4) years~~ the battery shall either be replaced or have a discharge test performed every five years. The Microgrid Operator shall maintain a log of these operations for inspection by the Company.

d. Tests and battery replacements as specified in this Section 3 shall be at the Microgrid Operator's expense.

e. Hybrid Microgrids shall also be subject to an acceptance test and a control system acceptance test prior to initial Grid-Connected Mode operation. The procedures for such tests will be provided to Microgrid Operator by the Company prior to executing this Agreement.

4. Inspection of the Hybrid Microgrid.

a. The Company may, in its discretion and upon reasonable notice not to be less than 24 hours (unless otherwise agreed to by the Company and the Microgrid Operator), observe the construction of the Hybrid Microgrid (including but not limited to relay settings and trip schemes), Generating Facilities within the Hybrid Microgrid and any related equipment to be installed therein.

b. A Hybrid Microgrid Smaller than 1 MW: Within fourteen calendar days after receiving a written request from the Microgrid Operator to begin operating as a Hybrid Microgrid, the Company may inspect the Hybrid Microgrid (including but not limited to relay settings and trip schemes) and observe the performance of the verification testing. The Company may accept or reject the request to operate as a Hybrid Microgrid based upon the inspection or verification test results.

c. A Hybrid Microgrid 1MW or Larger: The Company and Microgrid Operator will work together to schedule the acceptance test and control system acceptance test. The Microgrid Operator shall provide notice forty-five (45) calendar days in advance of its readiness to begin the acceptance test. The Company may accept or reject the request to begin producing electric energy based upon the results of the acceptance test and control system acceptance test.

d. With regards to facilities smaller than 1 MW only, if the Company does not perform an inspection of the Hybrid Microgrid (including but not limited to relay settings and trip schemes) and observe the performance of verification testing within the fourteen-day period, the Microgrid Operator may begin to produce energy after certifying to the Company that the Hybrid Microgrid has been tested in accordance with the verification testing requirements and has successfully completed such tests. After receiving the certification, the Company may conduct an inspection of the Hybrid Microgrid (including but not limited to relay settings and trip schemes) and make reasonable inquiries of the Microgrid Operator, but only for purposes of determining whether the verification tests were properly performed. The Microgrid Operator shall not be required to perform the verification tests a second time, unless irregularities appear in the verification test report or there are other objective indications that the tests were not properly performed in the first instance.

e. The Company may, in its discretion and upon reasonable notice not to be less than 24 hours (unless an apparent safety or emergency situation exists which requires immediate inspection to resolve a known or suspected problem), inspect the Hybrid Microgrid (including but not limited to relay settings and trip schemes) and its operations (including but not limited to the operation of control, synchronizing, and protection schemes) after the Hybrid Microgrid commences operations.

5. <u>Operating Records and Procedures</u>.

a. The Company may require periodic reviews of the maintenance records, and available operating procedures and policies of the Hybrid Microgrid. Microgrid Operator shall maintain adequate records of all maintenance services, any upgrade or changes applied to the Microgrid Facility throughout the operation for Company audit and to demonstrate compliance of all equipment covered by the scope of codes and standards.

b. Logs shall be kept by the Microgrid Operator for information on unit availability including reasons for planned and forced outages; circuit breaker trip operations, relay operations, including target initiation and other unusual events. The Company shall have the right to review these logs, especially in analyzing system disturbance, in Grid-Connected and/or Island-Mode. Microgrid Operator shall maintain such records for a period of not less than six (6) years.

6. <u>Changes to the Hybrid Microgrid, Operating Records, and Operating Procedures</u>.

a. The Microgrid Operator agrees that no material changes or additions to the Hybrid Microgrid as reflected in the single-line diagram, relay list, trip scheme, setting, and controller settings of the Hybrid Microgrid, Hybrid Microgrid equipment list, and three-line diagram shall be made

without having obtained prior written consent from the Company, which consent shall not be unreasonably withheld.

b. As a result of the observations and inspections of the Hybrid Microgrid (including but not limited to relay list, trip scheme and settings) and the performance of the verification tests, if any changes in or additions to the Hybrid Microgrid, operating records, and operating procedures and policies are required by the Company, the Company shall specify such changes or additions to the Microgrid Operator in writing, and the Microgrid Operator shall, as soon as practicable, but in no event later than thirty (30) calendar days after receipt of such changes or additions, respond in writing, either noting agreement and action to be taken or reasons for disagreement. If the Microgrid Operator disagrees with the Company, it shall note alternatives it will take to accomplish the same intent, or provide the Company with a reasonable explanation as to why no action is required by good engineering practice.

7. **Hybrid Microgrid Equipment List.**

The Hybrid Microgrid shall include the following equipment:

[**Note: Specific items to be attached as necessary. The Hybrid Microgrid equipment list, together with the single-line diagram, relay list and trip scheme, and three-line diagram, should be attached to this Exhibit B.**]

8. **All Requirements, Standards and Covenants are Material.** All of the performance standards, interconnection requirements, testing standards and other covenants of this Exhibit B are material to the safe and efficient operation of the Hybrid Microgrid. Any failure by Microgrid Operator to comply with such requirements, standards and/or covenants shall be deemed a material breach of this Agreement if, after written notice of such failure is provided by Company, Microgrid Operator is unable to remedy or cure such failure to the reasonable satisfaction of Company within ninety (90) days of such notification.

EXHIBIT C

COMPANY INTERCONNECTION FACILITIES

(To be filled out by Company)

1. Description of Company Interconnection Facilities

The Company will purchase (at Microgrid Operator's sole cost and expense), construct, own, operate and maintain the interconnection facilities required to Interconnect the Company System with the Hybrid Microgrid at _____ volts, up to the Point of Common Coupling, and those interconnection facilities required to establish the boundary of Hybrid Microgrid.

The description of the Company Interconnection Facilities, for which the Microgrid Operator agrees to pay, in advance, include:

[**Need to specify the interconnection facilities. If no interconnection facilities, state "None".**]

2. Microgrid Operator Payment to Company for Company Interconnection Facilities, Review of Hybrid Microgrid, and Review of Verification Testing

The Microgrid Operator shall pay to the Company Total Estimated Interconnection Cost. The following summarizes the Total Estimated Interconnection Cost:

Description	**Estimated Cost ($)** [If no cost, state "None".]
Total Estimated Interconnection Cost ($):	

The Total Estimated Interconnection Cost, which, except as otherwise provided herein, is non-refundable, shall be paid by the Microgrid Operator fourteen (14) calendar days after receipt of an invoice from the Company, which shall be provided not less than thirty (30) calendar days prior to start of procurement of the Company Interconnection Facilities.

Within thirty (30) calendar days of receipt of an invoice, which shall be provided within fourteen (14) calendar days of the final accounting, which shall take place within sixty (60) calendar days of completion of construction of the Company Interconnection Facilities, the Microgrid Operator shall remit to the Company the difference between the Total Estimated Interconnection Cost paid to date and the Total Actual Interconnection Cost. If in fact the Total Actual Interconnection Cost is less than the payments received by the Company as the Total Estimated Interconnection Cost, the Company shall repay the difference to the Microgrid Operator within thirty (30) calendar days of the final accounting.

If the Interconnection Agreement is terminated prior to the Microgrid Operator's payment for the Total Actual Interconnection Cost (or the portion of this cost which has been incurred) or prior to the Company's repayment of the over collected amount of the Total Estimated Interconnection Cost (or the portion of this cost which has been paid), such payments shall be made by the Microgrid Operator or Company, as appropriate. If payment is due to the Company, the Microgrid Operator shall pay within thirty (30) calendar days of receipt of an invoice, which shall be provided within fourteen (14) calendar days of the final accounting, which shall take place within sixty (60) calendar days of the date the

Agreement is terminated. If payment is due to the Microgrid Operator, the Company shall pay within thirty (30) calendar days of the final accounting.

All Company Interconnection Facilities shall be the property of the Company.

3. Operation, Maintenance and Testing Costs

The Company will bill the Microgrid Operator monthly and the Microgrid Operator will, within 30 calendar days after the billing date, reimburse the Company for any costs incurred in operating, maintaining, repairing/replacing or testing the Company Interconnection Facilities. The Company's costs will be determined on the basis of outside service costs, direct labor costs, material costs, transportation costs, applicable overheads at time incurred and applicable taxes. Applicable overheads will include such costs as vacation, payroll taxes, non-productive wages, supervision, tools expense, employee benefits, engineering administration, corporate administration, and materials handling. Applicable taxes will include the Public Service Company Tax, and Public Utility Fee.

EXHIBIT D

FORM OF LETTER OF CREDIT

[Bank Letterhead]

[Date]

Beneficiary: [Hawaiian Electric Company, HELCO or MECO, as appropriate]
[Address]

[Bank's Name]
[Bank's Address]

Re: **[Irrevocable Standby Letter of Credit Number]**

Ladies and Gentlemen:

We hereby establish, in your favor, our irrevocable standby Letter of Credit Number _____ (this "Letter of Credit") for the account of **[Applicant's Name]** and **[Applicant's Address]** in the initial amount of $_____ **[dollar value]** and authorize you, Hawaiian Electric Company **[HELCO or MECO, as appropriate]** ("Beneficiary"), to draw at sight on **[Bank's Name]**.

Subject to the terms and conditions hereof, this Letter of Credit secures **[Project Entity Name]**'s certain obligations to Beneficiary under the Hybrid Microgrid Interconnection Agreement dated as of _____ between **[Project Entity Name]** and Beneficiary.

This Letter of Credit is issued with respect to the following obligations:_____.

This Letter of Credit may be drawn upon under the terms and conditions set forth herein.

Partial draws of this Letter of Credit are permitted. This Letter of Credit is not transferable. Drafts on us at sight shall be accompanied by a Beneficiary's signed statement signed by a representative of Beneficiary substantially as follows:

The undersigned hereby certifies that (i) I am duly authorized to execute this document on behalf of Hawaiian Electric Company **[HELCO or MECO, as appropriate]**, and [(ii) the amount of the draft accompanying this certification is due and owing to Hawaiian Electric Company **[or HELCO or MECO, as appropriate]** under the terms of the Interconnection Agreement dated as of _____, between _____, and Hawaiian Electric Company **[or HELCO or MECO, as appropriate**]] [(ii) the amount of the draft accompanying this certification is due and owing to Hawaiian Electric Company **[or HELCO or MECO, as appropriate]** under the terms of the Interconnection Agreement, [(ii) the Letter of Credit will expire in less than thirty (30) calendar days, it has not been replaced or extended and collateral is still required under Section ___ of the Interconnection Agreement*].

* For draw relating to lapse of Letter of Credit while credit support is still required pursuant to the Power Purchase Agreement.

Such drafts must bear the clause "Drawn under **[Bank's Name and Letter of Credit Number _____ and date of Letter of Credit.]**"

All demands for payment shall be made by presentation of originals or copies of documents, or by facsimile transmission of documents to **[Bank Fax Number]** or other such number as specified from time to time by the bank. If presentation is made by facsimile transmission, you may contact us at **[Bank Phone Number]** to confirm our receipt of the transmission. Your failure to seek such a telephone confirmation does not affect our obligation to honor such a presentation. If presented by facsimile, original documents are not required.

This letter of credit shall expire one year from the date hereof. Notwithstanding the foregoing, however, this letter of credit shall be automatically extended (without amendment of any other term and without the need for any action on the part of the undersigned or Beneficiary) for one year from the initial expiration date and each future expiration date unless we notify you in writing at least thirty (30) calendar days prior to any such expiration date that this letter of credit will not be so extended. Any such notice shall be delivered by registered or certified mail, or by FedEx, both to **[revise for HELCO or MECO, as appropriate]**:

Director, CER Programs
Hawaiian Electric Company, Inc.
220 South King Street, 12th Floor
Honolulu, Hawai‘i 96813

and to

SVP & Chief Financial Officer
Hawaiian Electric Company, Inc.
1001 Bishop Street, 25th Floor
Honolulu, Hawai‘i 96813

We hereby agree with drawers that drafts and documents as specified above will be duly honored upon presentation to **[Bank's Name]** and **[Bank's Address]** if presented on or before the then-current expiration date hereof.

Payment of any amount under this Letter of Credit by **[Bank]** shall be made as the Beneficiary shall instruct on the next Business Day after the date the **[Bank]** receives all documentation required hereunder, in immediately available funds on such date. As used in this Letter of Credit, the term "Business Day" shall mean any day other than a Saturday or Sunday or any other day on which banks in the State of Hawai‘i are authorized or required by law to be closed.

Unless otherwise expressly stated herein, this irrevocable standby letter of credit is issued subject to the rules of the International Standby Practices, International Chamber of Commerce publication no. 590 ("ISP98").

[Bank's Name]:

By:_____
[Authorized Signature]

EXHIBIT E

METHODS AND FORMULAS FOR MEASURING PERFORMANCE STANDARDS, ACCEPTANCE TEST GENERAL CRITERIA, CONTROL SYSTEM ACCEPTANCE TEST CRITERIA

[SCHEDULE I WILL BE REVISED TO REFLECT THE RESULTS OF TECHNICAL REVIEW]

SCHEDULE I TO EXHIBIT E
METHODS AND FORMULAS FOR MEASURING PERFORMANCE STANDARDS

1. Performance Standards as defined below shall be used, in part, to govern actions by Company to limit the actual power output of the Hybrid Microgrid or its Generating Facilities for purposes of maintaining power quality on Company System. Specific standards are defined for:

   - Ramp Rate (RR)

2. Formulas for measuring the performance standards are presented below, and assume that the power fluctuations will be monitored on the Company's SCADA and EMS systems. These formulas are based on the periodicity at which analog data is retrieved from the RTU. This periodicity is called the "scan rate". Company presently uses a two-second analog scan rate. The formulas below are based on the two-second scans. The two-second scan rate, characteristics of transducers and RTU reporting, and SCADA method of calculation, were considered and included in the proposed values for the performance standards.

3. Ramp Rate Calculation:

$$RR = MW_s - MW_{s-30}$$

Where:

RR = Ramp Rate, may be calculated once every scan

MW_{s-30} = The instantaneous MW analog value 30 scans (60 seconds) prior the present scan

MW_s = The instantaneous MW analog value for the present scan

SCHEDULE II
ACCEPTANCE TEST GENERAL CRITERIA

[SCHEDULE II WILL NEED TO BE MODIFIED BASED ON THE TYPE AND DESIGN OF THE FACILITY]

Upon final completion of Company review of the Hybrid Microgrid's drawings, final test criteria and procedures shall be agreed upon by Company and Microgrid Operator no later than thirty (30) calendar days prior to conducting the acceptance test in accordance with the Agreement. The acceptance test may include the following:

1. Interconnection:

(a) Based on manufacturer's specification, test the local operation of the Hybrid Microgrid's ____kV breakers, which connect the Hybrid Microgrid to the Company System – must open and close locally using the local controls. Test and ensure that the status shown on the energy management system (EMS) is the same as the actual physical status in the field.

(b) Remotely test the operation of the Hybrid Microgrid's ___kV breakers which connect the Hybrid Microgrid to the Company System – must open and close remotely from Company's EMS. Test and ensure that the status shown on the EMS is the same as the actual physical status in the field.

(c) Relay test engineers to connect equipment and simulate certain inputs to test and ensure that the protection schemes such as any under/over frequency and under/over voltage protection or the direct transfer trip operate as designed. (For example, a fault condition may be simulated to confirm that the breaker opens to sufficiently clear the fault. Additional scenarios may be tested and would be outlined in the final test criteria and procedures.) Microgrid Operator to also test the synchronizing mechanisms to which the Hybrid Microgrid would be synchronizing and closing into the Company System to ensure correct operation. Other relaying also to be tested as specified in the protection review of the IRS and on the single line diagram for the Hybrid Microgrid.

(d) All ___kV breaker disconnects and other high voltage switches will be inspected to ensure they are properly aligned and operated manually or automatically (if designed).

(e) Switching station inspections – The switching station may be inspected to test and ensure that the equipment that Microgrid Operator has installed is installed and operating correctly based upon agreed-to design. Wiring may be field verified on a sample basis against the wiring diagrams to ensure that the installed equipment is wired properly. The grounding mat at the switching station may be tested to make sure there is adequate grounding of equipment.

(f) Communication testing – communication system testing to occur to ensure correct operation. Detailed scope of testing will be agreed by Company and Microgrid Operator to reflect installed systems and communication paths to tie the Hybrid Microgrid to the Company's communications system.

(g) Various contingency scenarios to be tested to ensure adequate operation, including testing contingencies such as loss of communications, and fault simulations to ensure that the Hybrid Microgrid's ___kV breakers open as they are designed to open. (Back up relay testing)

2. Witness Hybrid Microgrid protection scheme testing in Grid-Connected and Island Mode:

(a) Company may have a representative on-site when Microgrid Operator performs any testing dealing with Microgrid Operator's protection schemes such as any under/over voltage or under/over frequency protection schemes to ensure they meet the performance requirements of this Agreement and the IRS.

3. Telephone Communication in Grid-Connected and Island Mode:

(a) Test to confirm Company has a direct line to the Hybrid Microgrid control room at all times and that it is programmed correctly.

(b) Test to confirm that the Microgrid Operators can sufficiently reach Company System operator.

4. Witness Hybrid Microgrid operation in Grid-Connected and Island Mode:

(a) Company may have a representative on-site when Microgrid Operator performs any testing dealing with Microgrid Operator's operation in Grid-Connected and Island-Mode to ensure the performance requirements of this Agreement and the IRS are met.

(b) Witness performance testing of Hybrid-Microgrid in Island Mode to ensure all Participants within the Hybrid Microgrid receive the same quality of power as from the Company.

5. Witness Hybrid Microgrid Transitional Sequences:

(a) Company may have a representative on-site when Microgrid Operator performs transition to Island-Mode to according to the predefined approach (seamless or break-before-make) to ensure the Hybrid-Microgrid successfully transitions to Island Mode.

(b) Witness resynchronization of the Hybrid-Microgrid to the main grid and return to Grid-Connected Mode as designed, while maintaining appropriate power quality requirements.

If agreed in writing, some requirements, may be postponed to the CSAT.

SCHEDULE III
CONTROL SYSTEM ACCEPTANCE TEST CRITERIA

[SCHEDULE III WILL BE REVISED TO REFLECT THE RESULTS OF TECHNICAL REVIEW]

Final test criteria and procedures shall be agreed upon by Company and Microgrid Operator no later than thirty (30) calendar days prior to conducting the CSAT in accordance with good engineering and operating practices and with the terms of this Agreement. The RTU/EMS points list is necessary for the effective operation of the Company System and will be tested during the Control System acceptance test.

The CSAT is comprised of two parts, a set of onsite (at Hybrid Microgrid) specific tests and a monitoring performance test. These tests may include the following:

On-site Tests in Grid-Connected and Island Mode as applicable:

1. Telemetry and control test to verify the status and analog telemetry, and if the remote controls between the Company and the Hybrid Microgrid are working properly end-to-end.

2. Disconnect and Island Mode test to verify if the Hybrid Microgrid's controls and the Communications and Control Interface with the Company are working properly. The Test is generally conducted by the Microgrid Operator and witnessed by the Company.

3. Control test for voltage regulation to verify the Hybrid Microgrid can properly perform automatic voltage regulation as defined in this Agreement. Test is generally conducted by making small adjustments of the voltage setpoint and verifying by observation that the Hybrid Microgrid regulates the voltage at the point of regulation to the setpoint by delivering/receiving reactive power to/from the Company System to maintain the applicable setpoint according to the reactive power control and the reactive amount requirements of Section 2 of Exhibit B to the Interconnection Agreement.

4. Frequency regulation control test to verify the Hybrid Microgrid provides a frequency droop response as defined in this Agreement. Test is generally conducted by making adjustments of the frequency reference setting and verifying by observation that the Hybrid Microgrid responds per droop and deadband settings.

5. Loss-of-communication Test to verify the Hybrid Microgrid will properly ramp down or ramp up such that the power export or import, respectively, across the PCC to the Company is zero kW (+/-1% of the Total Rated Capacity) at the ramp rate defined in accordance with Exhibit B. Monitoring Test:

a) The monitoring test requires the Hybrid Microgrid to operate as it would in normal operations in Grid-Connected and Island Mode.

b) To ensure useful and valid test data is collected, the monitoring test shall end when one of the following criteria is met:

   A. The Hybrid Microgrid continuously operate in Island Mode, for at least [___hours] in any continuous 24-hour CSAT period.

c) At the end of the test, an evaluation period is selected based on the criteria that triggered the end of the test.

d) The performance of the Hybrid Microgrid during the period of a successfully completed monitoring test is evaluated to verify the performance meets the requirements of this Agreement, as specified in Exhibit B. The Hybrid Microgrid is considered to have complied with a requirement if the Hybrid Microgrid was compliant with the requirement at least 99.0% of the time during the evaluation period and the Hybrid Microgrid does not grossly violate the requirement when the Hybrid Microgrid was in violation. The Parties understand and agree that these compliance conditions are limited only to determining whether the Hybrid Microgrid successfully completes the CSAT monitoring test and are not for use in determining compliance during Commercial Operations, shall not be considered a waiver of any of the performance standards of Microgrid Operator, all of which are hereby reserved, and shall not alleviate Microgrid Operator from any of its obligations under the Agreement.

EXHIBIT F

HYBRID MICROGRID OPERATING PARAMETERS

[EXHIBIT F MAY BE REVISED TO REFLECT THE RESULTS OF TECHNICAL REVIEW AND/OR FINAL INTERCONNECTION REQUIREMENTS STUDY]

1. **INITIAL HYBRID MICROGRID OPERATING PARAMETERS** The following Hybrid Microgrid operating parameters, including disconnection/reconnection from/to the Company System, testing of Hybrid Microgrid and/or Generating Facilities, and repairs, are initial baseline requirements and may be expanded, amended, and/or modified following technical review and/or the completion of the final Interconnection Requirements Study for the Hybrid Microgrid.

2. **HYBRID MICROGRID DISCONNECTION/RECONNECTION FROM/TO COMPANY SYSTEM**
   a. Disconnection of the Hybrid Microgrid from Company System:
      i. Scheduled Island Mode. A Scheduled Island Mode Operation can be initiated through a manual action by the Microgrid Operator or the Company or other operating dispatch means (e.g., energy management system) that trigger the transition from operating in Grid-Connected Mode to (i.e., in parallel and synchronized with the Company System) to operating in Island Mode.
         1. Scheduled Island Mode Operation is normally initiated to test Island Mode Operation, or as a pre-emptive action ahead of impending weather events or Emergency Events.
         2. At the request of the Microgrid Operator, the Microgrid Operator shall coordinate with the Company to facilitate switching activities. Company has final approval to do so.
         3. At the request of the Company, the Company to provide 30-day notice for planned outages.
      ii. Unscheduled Island Mode. Unscheduled Island Mode Operation is initiated autonomously in response to abnormal conditions present on the Company System. An automatic action will trigger the Microgrid to transition from Grid-Connected Mode to Island Mode.
         1. The Hybrid Microgrid may disconnect from the Company System and transition from Grid-Connected Mode to Island Mode as measured at the PCC, (1) under any of the Trip or Cease to Energize conditions as required by Exhibit B (i.e., as described in the Ride-Through requirements) or (2) where anti-islanding conditions are present where the Hybrid Microgrid or its Generating Facilities are required to Cease to Energize and Trip within two seconds where an island may be detected on the Company System. In either of these cases, the Hybrid Microgrid may transition to Island Mode provided that the Microgrid does not energize any part of the Company System that is outside the defined electrical boundaries of the Microgrid.
         2. Emergency repairs by Company that require Island Mode of Microgrid.
      iii. Transition from Grid-Connected Mode to Island Mode. If the Microgrid transitions from Grid-Connected Mode to Island Mode while the Company System is operating within the Continuous Operating region defined in the Ride-Through requirements described in Exhibit B, the act of transitioning shall not cause step or ramp changes in the voltage measured at the PCC exceeding 5% of nominal and exceeding 5% per second averaged over a period of one second. This Frequency Ride-Through requirement (regardless of whether the Company System has a disturbance) also ensures that the act of transitioning does not cause a

frequency disturbance on the Company System. These limits also apply to frequent switching of capacitors, frequent tripping or misoperation of the Hybrid Microgrid and its Generating Facilities, or frequent energization of transformers.

1. During a Scheduled Island Mode event, the Microgrid additionally, shall ramp down or ramp up such that the power export or import, respectively, across the PCC to the Company is zero kW (+/-1% of the Total Rated Capacity) at the ramp rate defined in accordance with Exhibit B.

iv. Company shall be allowed to trip the Hybrid Microgrid and/or its Generating Facilities at any time.

v. Company shall be granted methods of blocking control of isolating device(s) at PCC for preventing un-expected Microgrid re-connection.

b. Re-connection of a Hybrid Microgrid to Company System:

i. Decision to re-connect subsequent to a Scheduled Island Mode:

1. The Company shall detail the process for re-connecting and synchronization, including the conditions under which the Microgrid Operator can re-connect to the Company System~~shall obtain permission from the Company for re-connecting to the Company System and coordinate the process of synchronization and re-connection~~. [Details of the process to be worked out between the Company and Microgrid Operator]

ii. Decision to re-connect subsequent to an Unscheduled/ Emergency Island Mode

1. Microgrid Operator shall confirm the Company System is at stable operating conditions by measuring and qualifying the voltages and power frequency of the system at PCC for a period of 5 minutes (re-connect delay), consistent with the Return to Service requirements pursuant to Rule 14H, prior to informing and coordinating with the Company for initiating the re-connection process. The re-connect delay shall be adjustable in the range of 30 seconds to 60 minutes.

iii. Method of synchronization and re-connect:

1. The designated switch at PCC (means of Microgrid isolation) shall be equipped with a sync-check relay
2. Microgrid Operator has to determine the operating (real time) voltage, frequency, and phase angle of the voltage waveform on the Company side of the PCC and drive the Microgrid Generating Facilities to match those values as close as technically possible to achieve synchronization criteria (based on voltage difference, frequency difference, and phase angle difference) prescribed in the Interconnection Agreement. The Microgrid Operator may choose to set the frequency slightly lower than the Company power frequency (e.g. 0.1 Hz lower) to ensure a point of intersection between the instantaneous values of voltage waveforms on each side of the PCC can be achieved.
3. Following synchronization methods can be utilized:
    a. Active synchronization – In this method Microgrid voltage and frequency are controlled and maintained to tightly align with the Company System voltage and frequency (based on Synchronization criteria in the Interconnection Agreement) and then switch at PCC is closed.
    b. Passive synchronization – In this method, no measure is taken to closely align the voltage and frequency at both sides of PCC. This method solely relies on creating an intersection point where all conditions are met and use of s sync-check relay at PCC to verify condition and close the PCC switch. The closing time of the PCC switch shall be less than 8 cycles to avoid out-of sync closing once a close command is issued by the sync-check relay.

c. Open Transition — this method is not preferred, since it exposes Participant to additional momentary outage, but it may be considered if there is agreement among Participants and the Microgrid Operator. The method involves de-energizing all Generating Facilities in the Hybrid Microgrid, prior to closing the PCC switch. Once the Microgrid is re-connected and Participants are restored, the Generating Facility can then be restarted as directed by the Company.

iv. Post re-connection:

1. The Microgrid re-connection shall not create voltage change at PCC more than 3% in any condition.

c. The Company may disable or disconnect the Hybrid Microgrid for failure to comply with the parameters stated in this Exhibit F (Hybrid Microgrid Operating Parameters) pursuant to Section 11, Continuity of Service and Section 12, Personnel and System Safety of this Interconnection Agreement.

3. TESTING OF HYBRID MICROGRID AND GENERATING FACILITIES AND REPAIRS

a. Initial Testing for Hybrid Microgrid operation. Initial testing for the Hybrid Microgrid shall be conducted in accordance with the CSAT procedures outlined in the Hybrid Microgrid Interconnection Agreement

b. Periodic Hybrid Microgrid testing.

i. Test and verify means of real-time communications (Company SCADA grade or better) between Company dispatch center and the Microgrid Operator (or controller).

ii. Test and verify that Microgrid Operator can report Microgrid state of operation, available energy capacity, and power quality values (pre-defined) measured at PCC and at each Generating Facility POI in real time to the Company dispatch center.

iii. Test and Verify that Microgrid can reduce the power flow at PCC (both active and reactive power) close to zero and maintain a state of zero-power flow at PCC for a pre-defined zero-flow duration (e.g. 5 minutes - adjustable duration between 30 seconds to 60 minutes).

iv. Test and Verify that connection and disconnection of Generating Facilities within a Microgrid does not cause a voltage change more than 3% at PCC per IEEE 1547-2018 for medium voltage synchronization.

v. Test and Verify that Hybrid Microgrid can be remotely disconnected from Company System.

vi. Test and Verify that Microgrid Generating Facility can perform black start without the need for “house power” being supplied from the Company System, when in Island Mode.

vii. Test and Verify that Microgrid Generating Facility can pick up all Participants loads, either in one step or in multiple steps, using load sectionalizing and restoration schemes – under both cold load or hot load pickup.

viii. Test and Verify that Microgrid Generating Facility can respond to load step change of certain size (pre-determined) while maintaining voltage and frequency within prescribed ranges, described in the Interconnection Agreement.

ix. Test and Verify that Hybrid microgrid can synchronize and reconnect Microgrid area with Company System at PCC, based on given criteria in Interconnection Agreement.

c. Testing for Generation Facilities

i. Acceptance testing – each Generating Facility shall meet the Company’s acceptance test in the Company’s Interconnection Agreement

ii. Acceptance testing as part of the Microgrid

iii. Periodic Generating Facility testing

d. Protection System Verifications

i. The Microgrid Operator shall provide evidence of having the capability to detect external faults (i.e. faults outside of the Microgrid electrical boundary) and isolate the Microgrid from Company System within a pre-defined duration.

ii. The Microgrid Operator shall provide evidence of having the capability to detect and clear internal faults (within the Microgrid boundary) in both Grid-Connected Mode and Island Mode.
iii. Microgrid Operator shall provide provisions for implementing a protection scheme which is adjusted automatically to adapt to the change in short circuit levels as the Microgrid transitions between Grid-Connected Mode and Island Mode.
iv. Microgrid Operator shall provide that the Microgrid Facility maintains protection coordination with Company distribution system during Grid-Connected Mode.
v. Microgrid Operator shall verify and provide "As-Left" Protection settings for all associated protection schemes of Generating Facilities, either parts of the external protection devices or residing in the inverter-based resources – upon request by Company.
vi. Microgrid operator shall maintain protection and metering accuracy and state of health as described in the Interconnection Agreement.

e. Control and Communications System Verification
i. Microgrid Operator shall be responsible for establishing and maintaining communications in accordance with Company standard protocols to the Company control platform.
ii. Microgrid Operator shall have provisions for prioritizing Company dispatch control over Microgrid control so that the Company operator is able to override Microgrid controls in case of an emergency or event.
iii. Microgrid Operator shall have the capability to connect/disconnect the Generating Facility upon Company request during Gird-Connected Mode.

4. NOTICE OF HYBRID MICROGRID OPERATION OR TESTING

a. A minimum of ____ calendar days prior written notice is required to conduct testing of the Hybrid Microgrid.

b. A minimum of ____ calendar days prior written notice is required to conduct a Scheduled Island Mode operation initiated by the Microgrid Operator.

c. Microgrid Operator shall provide such notice to:
via email:
[Company Representative]
[Position/Title]
_____@hawaiianelectric.com

or letter correspondence at:
Hawaiian Electric
_____
_____
Attn: _____

d. On the mutually-agreed-upon testing date, prior to commencing testing, Microgrid Operator shall contact Hawaiian Electric's System Operation Control Center ("SOCC") as _____ to confirm both systems are ready for testing to begin. Additional sequential requirements:

i. [NOTE: SPECIFIC SWITCHING OPERATIONS TO BE FILLED IN BASED UPON THE INTERCONNECTION REQUIREMENTS STUDY]

EXHIBIT G

DEFINITIONS FOR HYBRID MICROGRID ~~INTERCONNECTION~~ AGREEMENT

Unless otherwise defined in this Agreement, capitalized terms in this Microgrid Services Tariff - Hybrid Microgrid ~~Interconnection~~ Agreement (3 MW or less), including all Exhibits, shall be defined as follows, which definitions shall be consistent with defined terms in the Microgrid Services Tariff, to the extent repeated in this Exhibit G (subject to references to sections or provisions in this Agreement which may be added for clarifying purposes only). Any terms not otherwise defined in this Exhibit G or in the Agreement shall have the same meaning ascribed to them in the Microgrid Services Tariff. In the event of any conflict between the definitions in this Agreement, Exhibit G, and the Microgrid Services Tariff, this Agreement and Exhibit G shall control.

1. "Agreement" or "Interconnection Agreement" means this Microgrid Services Tariff - Hybrid Microgrid Interconnection Agreement (3 MW or less), including all Exhibits and Schedules attached hereto.

2. "Applicant" means the Microgrid Operator applying under the Microgrid Services Tariff.

3. "Application" or "Hybrid Microgrid Application" means the form by which the Applicant provides a description of the planned Hybrid Microgrid and applies to the Company to be a Microgrid Operator.

4. "Bill Credits" means the dollar amount credited by the Company to each Participant on the Participant's retail electric service bill, which represents the payment from Participant's participation in other distributed generation serving the premises of the Participant and other customer energy programs, if applicable.

5. "Commercial Operations Date" shall be the first day of the calendar month following the date on which all of the following conditions have been satisfied with respect to the Hybrid Microgrid: (a) Microgrid Operator has completed construction of the facilities necessary to operate the Hybrid Microgrid in accordance with the requirements of this Agreement; (b) all Company testing of the Hybrid Microgrid has been completed and passed by the Company; (c) all Generating Facilities within the Hybrid Microgrid have an interconnection agreement with the Company, (d) originally executed Disclosure Checklists have been provided to the Company from all Customers within the Hybrid Microgrid, and (e) the Microgrid Operator provides Company with written notice that (i) the all Customers within the Hybrid Microgrid have signed the Disclosure Checklist and entered into an agreement to participate with the Microgrid Operator and (ii) Microgrid Operator is ready to declare the Hybrid Microgrid in commercial operation.

6. "Commission" means the Public Utilities Commission of the State of Hawai'i.

7. "Company" means [Hawaiian Electric Company, Inc., Maui Electric Company, Ltd., Hawaii Electric Light Company, Inc.].

8. "Company Confidential Information" means all data provided by Company to Microgrid Operator pursuant to this Agreement or in any way connected with the Microgrid Services Program and the administration of the Microgrid Services Program including but not limited to Participant names, Participant account numbers and information on such accounts, Participant addresses, Participant rate schedules and Participant's participation in other distributed generation serving the premises of the Participant and any related Bill Credits and all information regarding Company's Customers, Customer lists, any of the data and testing results produced under this Agreement and any information identified by Company as confidential.

9. "Company Interconnection Facilities" are those to Interconnection facilities furnished, installed, operated and maintained by the Company on the Company's side of the PCC as required for Grid-Connected Mode and any Interconnection facilities needed to establish the electrical boundary of the Hybrid Microgrid and as more fully described in Exhibit C (Company-Owned Interconnection Facilities) attached hereto and made a part hereof.

10. "Company System" means all electrical wires, equipment and other facilities owned or provided by the Company, through which the Company provides electrical service to its Customers.

11. "Customer" or "Customers" used herein is as defined in Company Rule No. 1.

12. "Customer Interconnection Agreement" means the applicable interconnection agreement for a non-utility Generating Facility.

13. "Disclosure Checklist" means the Microgrid Operator Disclosure Checklist attached as Appendix I to the Microgrid Services Tariff.

14. "Distribution Level" is defined as Interconnection to electrical wires, equipment, and other facilities at the distribution voltage levels (such as 25kV (Oahu only), 12kV, or 4kV) owned or provided by the Company, through which the Company provides electrical service to its Customers.

15. "Emergency Events" means emergency conditions and pre-emergency conditions as specified in footnotes 5 and 7 in Rule No. 14H Appendix I. ~~(1) as determined by Company in its reasonable discretion, a condition or situation requiring prompt action by Company (a) to maintain the reliable operation of the Company System; (b) to prevent or limit the loss of load or generation; (c) to maintain public safety or the safety of Company's personnel; or (d) to protect Company, Customer, or third-party property; or (2) as a Scheduled Island Mode Operation as a pre-emptive action ahead of impending weather events or natural disasters or in response to other unusual conditions.~~

16. "Escrow Agent" is a reputable escrow agent acceptable to the Company.

17. "Force Majeure Event" means any event: (a) that is beyond the reasonable control of the affected Party; and (b) that the affected Party is unable to prevent or provide against by exercising reasonable diligence, including the following events or circumstances, but only to the extent they satisfy the preceding requirements: acts of war, public disorder, insurrection or rebellion; floods, hurricanes, earthquakes, lighting, storms, and other natural calamities; explosions or fires; strikes, work stoppages, or labor disputes; embargoes; and sabotage.

18. "Generating Facility" means Customer or Company-owned electrical power generation that is Interconnected to the Company System.

19. "Grid-Connected Mode" means a mode of operation when the Microgrid is Interconnected to and operating in parallel with the Company System, is not operating in Island Mode, and the Company maintains operational coordination of the delivery of electric service.

20. "House Power" includes the electricity needed to assist in the Hybrid Microgrid Facility's system operation, performance monitoring, generation, and associated communications (including energy d~~ha~~irectly required for the local control and safe operation of the Hybrid Microgrid Facility) and also includes other electricity used by the Hybrid Microgrid, such as for perimeter lighting or any other structures or facilities at the Hybrid Microgrid Facility.

21. "Hybrid Microgrid" is a Microgrid that uses utility and non-utility infrastructure beyond the PCC, including distribution lines, Generating Facilities and related equipment, to meet its interconnected loads as more particularly described and identified in Exhibit A to this Agreement.

22. "Hybrid Microgrid Facility" means the facilities and equipment needed to create and operate a Hybrid Microgrid, including the generation, breakers, protective and associated equipment, improvements, and other tangible assets, contract rights, easements, rights of way, surface use agreements and other interests or rights in real estate reasonably necessary for the construction, operation, and maintenance of the Hybrid Microgrid subject to the Microgrid Services Tariff.

23. "IEEE" means Institute of Electrical and Electronics Engineers.

24. "Interconnect" or "Interconnected" or "Interconnection" means the physical connection(s) between the Company System and the Microgrid at a designated PCC.

25. "Interconnection Requirements Study" or "IRS" means pursuant to Rule 14H, Appendix III, Section 4, a study to establish the requirements for interconnection with the Company System.

26. "Island Mode" means a mode of operation when a Microgrid that normally operates in Grid-Connected Mode is disconnected from the Company System at PCC, and the Microgrid is generating or producing energy to provide electric service within the Microgrid under the operational coordination of the Microgrid Operator. Hybrid Microgrids may enter Island Mode only under (1) Emergency Events, or (2) as otherwise permitted or directed by the Company.

27. "Land Rights" means all easements, rights of way, licenses, leases, surface use agreements and other interests or rights in real estate.

28. "L/C Proceeds" is the amount of proceeds drawn on the letter of credit by the Company in the event the letter of credit is not renewed or extended at least thirty (30) calendar days prior to its expiration or earlier termination.

29. "Microgrid," means a group of interconnected loads and distributed energy resources within clearly defined electrical boundaries that acts as a single self-governing controllable entity with respect to the utility's electrical grid and is connected to a public utility's electrical grid at the PCC to operate in Grid-Connected Mode and can disconnect from the utility's electrical grid to operate in Island Mode only during Emergency Events, and that: (1) is subject to the Microgrid Services Tariff; and (2) generates or produces energy.

30. "Microgrid Participant" or "Participant" means the Customer that has executed the appropriate documents with the Microgrid Operator to participate in the Hybrid Microgrid in which the Customer is located.

31. "Microgrid Operator" is as defined in the beginning of the Agreement.

32. "Microgrid Operator Agents" means the Microgrid Operator's contractors, vendors, subcontractors, installers, suppliers and/or agents.

33. "Microgrid Operator Interconnection Facilities" are those Interconnection facilities (such as circuit breakers, relays, switches, synchronizing equipment, monitoring equipment, and control and protective devices and schemes) furnished, installed, operated and maintained by the Microgrid Operator on the Microgrid Operator's side (in other words the Hybrid Microgrid's side) of the PCC as required for Grid-Connected Mode which are designated by or acceptable to the Company as suitable for the Grid-Connected operation

of the Hybrid Microgrid with the Company System as more fully described in in Exhibit B (Microgrid Operator-Owned Hybrid Microgrid and Interconnection Facilities) attached hereto and made a part hereof.

34. "Microgrid Services Program" is as defined in the WHEREAS clauses in beginning of the Agreement.

35. "Microgrid Services Tariff" is as defined in the WHEREAS clauses in beginning of the Agreement.

36. "Network System" An electrical system in which two or more utility feeder sources are electrically tied together on the primary or secondary voltage level to form one power source for one or more Customers and is designed to provide higher reliability for Customers connected to it.

37. "NEC" means National Electric Code.

38. "NIST" means the National Institute of Standards and Technology.

39. "Participant Agreement" means the contract between the Microgrid Operator and the Participant.

40. "Point of Interconnection" or "POI" is the point at which the Company and the Customer interface, including the Generating Facility, occurs.

41. "Point of Common Coupling" or "PCC" is shown on the single-line diagram and three-line diagram (provided by the Microgrid Operator and reviewed by the Company) which are attached to Exhibit B (Microgrid Operator-Owned Hybrid Microgrid and Interconnection Facilities).

42. "RTU" means remote terminal unit.

43. "Security" means that irrevocable standby letter of credit with no documentation requirement (i) in an amount not less than twenty-five percent (25%) of the total estimated costs for the Company Interconnection Facilities; (ii) substantially in the form attached to this Agreement as Exhibit D (Form of Letter of Credit) from a bank or other financial institution located in the United States with a credit rating of "A-" or better, and (iii) such letter of credit shall remain in effect through the earlier of forty-five (45) calendar days after the Commercial Operations Date, or seventy-five (75) calendar days after the termination of this Agreement and true-up of any costs owed to Company.

44. "Security Breach" means a breach and/or unauthorized access, potential breach and/or unauthorized access, or other security incident at the Hybrid Microgrid or of Microgrid Operator's systems.

45. "Supervisory Control" or "SCADA" means remote monitoring and/or control of a Generating Facility's power output and interrupting device status by means of a communication channel that is acceptable to the Company.

46. "Scheduled Island Mode Operation" means a Hybrid Microgrid operating in Island Mode that is scheduled and coordinated between the Microgrid Operator and the Company, as more particularly described in Section H of the Microgrid Services Tariff and Exhibit F to the Interconnection Agreement.

47. "Total Actual Interconnection Cost" is (i) the total costs of the Company Interconnection Facilities, and (ii) the total engineering costs associated with a) developing the Company Interconnection Facilities and b) reviewing and specifying those portions of the Hybrid Microgrid which allow Interconnected operations as such are described in Exhibit A, and iii) reviewing the verification testing.

48. "Total Estimated Interconnection Cost" is a cost paid by the Microgrid Operator to the Company and consists of (i) the estimated cost of the Company Interconnection Facilities, (ii) the estimated engineering costs associated with a) developing the Company Interconnection Facilities and b) reviewing and specifying those portions of the Hybrid Microgrid which allow Interconnected operation, and iii) witnessing and reviewing the verification testing, which shall include testing of the telemetry and control interface which allows the Company to remotely measure, monitor, evaluate and verify technical compliance, Hybrid Microgrid performance, and power quality and, if necessary, control of the Hybrid Microgrid.

49. "Total Rated Capacity" means the aggregate total of all Generating Facilities that intend to supply power to the Hybrid Microgrid during Island Mode as defined in Section 7 of Exhibit A to this Interconnection Agreement.

50. "Total Peak Demand" means the peak demand (MW) in the previous 12-months as measured by the Company, or as estimated by the Company where actual measurements are not available.

51. "Unscheduled Island Mode Operation" means a Hybrid Microgrid operating in Island Mode that is not scheduled or coordinated between the Microgrid Operator and the Company in response to an unplanned event on the Company System, as more particularly described in Section H of the Microgrid Services Tariff and Exhibit F to this Interconnection Agreement.

Appendix I
Disclosure Checklist

Hybrid Microgrid Services Program
Hybrid Microgrid Operator Disclosure Checklist[1]

The undersigned ("Participant") has agreed to participate in the following Hybrid Microgrid Project:

Hybrid Microgrid Project Name:
_____

Hybrid Microgrid Project Address:
_____
_____

Electrical Boundaries of the Hybrid Microgrid:
_____
_____

Expected Activation Date of the Hybrid Microgrid:
_____

Microgrid Operator:
_____

☐ Microgrid Operator is a Hawaiian Electric Customer.

Hybrid Microgrid Operator contact information for Participant questions and complaints:
Address (if different from above):
_____
_____

Participant Name:
_____

☐ Participant is Hawaiian Electric Customer.

Telephone number:

Email address:

Web Site URL:

Fax:

If a Third Party is the Hawaiian Electric Customer, please identify name and address and relationship to the Microgrid Operator and Participant.
_____
_____

Participant Service Address where receiving electrical service from [Hawaiian Electric Company]:
_____
_____

Participant's Account Number with [Hawaiian Electric Company]:
_____
_____

Participant Mailing Address (if different from above:
_____

[1] Unless otherwise defined herein, capitalized terms shall have the same meaning ascribed to them in the Microgrid Services Tariff Hybrid Microgrid Interconnection Agreement.

This Disclosure Checklist is intended to enable potential Participants in the service territories of Hawaiian Electric, Maui Electric, and/or Hawai'i Electric Light to clearly understand where (and whether) a given Microgrid Operator ("Microgrid Operator") discloses the below-listed relevant terms and conditions in the contract between you, the Participant, and the Microgrid Operator ("Participant Agreement") as required by the Microgrid Services Tariff.[2]

Each Microgrid Operator shall complete this Disclosure Checklist with the page number and/or section reference in its Participant Agreement indicating where the stated disclosure or disclaimer is found in the Participant Agreement. Microgrid Operator's initial beside each Disclosure described in this Checklist shall serve as the Microgrid Operator's warranty to the Participant that the subject of the Disclosure is present in the Participant Agreement.

Microgrid Operator Initials	Disclosure Description	Page # in Agreement	Participant Confirmed Initials
MICROGRID PARTICIPANT BILL OF RIGHTS			
	Covenant by Microgrid Operator to Participant that it will adhere to the "Microgrid Participant Bill of Rights" and provide a copy of such to the Participant, when an approved version is available.		
FUTURE COSTS AND BENEFITS			
	Production projections and a description of the methodology used to develop production projections.		
	Bill savings and added cost projections and a description of the methodology used to develop bill projections.		
	All nonrecurring (i.e., one-time) charges.		
	All recurring charges and any escalation rate associated with those charges.		
	Terms and conditions of Service.		
	Whether any charges may increase during the Term, and if so, how much advance notice is provided to the Participant.		

	Whether the Participant is required to sign a term contract.		
	Terms and conditions for early termination to leave the Microgrid.		
	The process for selling and/or transferring the Participant's underlying property that is part of the Microgrid and any associated costs related thereto.		
	The process for discontinuing or transferring authorization of Microgrid services and any associated costs.		
	Any financial penalties that the Microgrid Operator may charge to the Participant or impacts to the Participant, including but not limited to discontinuing or transferring authorization of Microgrid services.		
	Impact of Microgrid on the other utility programs that Participant is or may be involved in.		
	Explanation of how the Microgrid will affect Participant's existing or future agreements to provide grid services to the Company and Participant's obligation to meet such requirements (e.g., availability, capacity, etc.) when such services are called upon by Company.		
PROGRAM DESCRIPTIONS			
	Description of the operations of the Microgrid, the conditions that the Participant will receive service from the Microgrid Operator and when they will receive service from Hawaiian Electric.		
	Description of circumstances and method of notice Participants will be issued when the Microgrid is in Island Mode, and when it is in Grid-Connected Mode.		
	Both in Grid-Connected Mode and Island Mode, Participants will pay for such services to the Company at regular customary rates for service. Company will compensate the Microgrid Operator as provided in its agreement with Company, consistent with the Microgrid Tariff.		

	Microgrid limitations (i.e., maximum and minimum kW per Participant)		
	Microgrid Operator notification requirements to Participants regarding project changes, changes in Microgrid Operator and/or Hybrid Microgrid ownership, development status, and operational updates		
	Microgrid Operator notification requirements to Participants regarding project changes, changes in Microgrid Operator and/or Hybrid Microgrid ownership, development status, and operational updates		
DISCLAIMERS AND RESPONSIBILITIES			
	During Island Mode operation, Microgrid Operator may charge other charges and rates. Explanation and disclosure of those rates and charges charged by the Microgrid Operator that do not fall under the jurisdiction and oversight of the State of Hawai`i Public Utilities Commission (“Commission”)		
	Microgrid Operator is responsible for providing electrical service during Island Mode. Accordingly, although the payment of energy is transacted through the Company, during Island Mode, the Company and the Commission make no warranty or representation concerning the character or quality of electric service during Island Mode.		
	The Company is responsible for providing electric service during Grid-Connected Mode. All Company’s tariff and rules apply to the electric service provided by the Company as approved by the Commission		
	Statement that Microgrid Operator is solely responsible for resolving any disputes between Participant and Microgrid Operator while in Islanded Mode and for any charges by Microgrid Operator.		
	Statement that Hawaiian Electric is solely		

	responsible for resolving any disputes with the Participant while in Grid-Connected Mode or about the applicable Company rates and charges.		
	Nothing in the Participant Agreement shall be deemed to alter or modify any rate schedule, charge, or condition of service established from time to time by the Commission for electric service provided by the Company. All such rates and charges from the Customer's applicable rate schedule shall apply and remain, subject to change in accordance with Commission rules.		
	Participation in a microgrid service whereby the operation of that microgrid precludes the Participant from delivering services (e.g., Island Mode) in accordance with the Company's contract or tariff shall not absolve Participant from such contractual or tariff obligations and inability to deliver services.		
	Statement that Disclosures provided in this section, or in the Disclosure Checklist, are supplemental, and do not replace, the disclosure and consumer protection requirements required of any other tariff or program.		
	Statement that the Commission and Hawaiian Electric, Maui Electric, or Hawai'I Electric Light (as applicable) make no warranty or representation concerning potential implications, if any, of federal or state tax, securities, or other laws.		
	Data privacy policies of Microgrid Operator.		
	Description of circumstances and method of notice Microgrid Operators will be issued when the Microgrid Facility is out of service during Island Mode.		
	Assurances that all installations, upgrades and repairs will be under direct supervision of a qualified professional and that maintenance will be performed according		

	to industry standards, including the recommendation of the manufacturers of solar panels and other operational components.		
	How to obtain a copy of the Microgrid Operator's Operating Agreement with Hawaiian Electric for the Microgrid Tariff		

The Participant, by executing below, hereby acknowledges and represents that it has agreed with the Microgrid Operator to participate in the above Hybrid Microgrid Project and has reviewed the items in this Disclosure Checklist to Participant's satisfaction. It is recommended that the Participant keep a copy of this Disclosure Checklist with the Participant Agreement.

Participant's Name: _____

Participant's Signature: _____

Print or Type name and
Title of signatory if
Participant is a corporation
or unit of government: _____

Date: _____

Hawaiian Electric

Microgrid Services Tariff Working Group

December 21, 2020

Agenda

- Commission’s Guidance
- Proposed Timeline

Commission's Guidance – 12/10/20 Letter

- Parties jointly file revised documents by Jan. 25, 2021 to:
  - Address recommended actions (next section)
  - Address any other issues the Parties identify as needing attention
  - For areas of disagreement, Parties individually file alternative redlines with supporting arguments

Hawaiian Electric

Commission's Recommended Actions

12/10/20 Letter

1) Customer Microgrid Interconnection Agreement

1. <u>Customer Microgrid Interconnection Agreement</u> (Tariff Section A)

Hawaiian Electric clarified that an Interconnection Agreement for Customer Microgrids would not be necessary. The Parties generally agreed that the Application for Customer Microgrids, as well as enrollment in applicable DER Programs, would accommodate the needs of Customer Microgrids. It appears that no further action is needed regarding the Interconnection Agreement for Customer Microgrids.

Proposed Action

- None

2) Definition of Customer

12/10/20 Letter

2. Definition of the Customer (Tariff Sections A.1.g and E.1.a)

MRC explained that its proposed edits to the Tariff section A.1.g stem from concerns about variety of different relationships that a Microgrid Operator could have with Microgrid Participants, and that so long as the definition does not preclude a third party Microgrid Operator that is different than the Microgrid Owner the definition does not need to be updated. MRC agreed that this concept should be clarified in Section E.1.a. Ulupono Initiative stated that the definition of customer may still be problematic, but agreed that Section E.1.a needed further clarification. The Parties should discuss MRC's redlines to the definition of Customer in the Draft Tariff (which includes the Microgrid Operator of a Customer Microgrid in the definition) and revise the definition accordingly. In doing so, the Parties should consider the roles of the owner of a Microgrid and the Microgrid Operator, any applicable laws in Hawaii, and determine whether a distinction should be made between these roles in the Tariff.

MRC's Redline

g. "Customer" or "Customers" used herein is as defined in Company Rule No. 1. and includes the Microgrid Operator of a Customer Microgrid.

Proposed Actions

- WG members to discuss at next meeting

3) Applicability of Other Tariffs

12/10/20 Letter

3. <u>Applicability of Other Tariffs</u> (Tariff Section B.3)

MRC clarified that its proposed edits to section B.3 stem from the idea that in a Customer Microgrid, only the owner of the generating unit or lessee of the generating unit would be compensated under existing DER Programs. The Parties agreed to review MRC's proposed edits to clarify and further distinguish between the Microgrid Operator and the Microgrid Owner. The Commission recommends that the Parties discuss MRC's proposed redlines, including the inclusion of language stating that a Customer Microgrid shall not be subject to Rule 15. The Parties should decide whether those redlines should be included in the revised Draft Tariff.

MRC's Redline

3. For Customer Microgrids and Hybrid Microgrids, existing tariffs and programs shall generally be applicable. However, a Customer Microgrid shall not be subject to Rule 15. In addition, any Company Rule which requires that Generating Facilities be owned by a Customer or located on Customer premises to be eligible shall be deemed to include all Generating Facilities that are behind the Point of Common Coupling of a Customer Microgrid and under the operating control of the Microgrid Operator.

<u>Proposed Action</u>

- MRC to present perspective to WG for discussion at next meeting

4) Indemnification

4. <u>Indemnification</u> (Tariff Sections C.1-2)

Hawaiian Electric favored including indemnification language in the tariff, at least as a starting point, in order to account for the variety of possible structures behind the meter and corresponding relationships. However, Ulupono asserted that having the indemnification language in the tariff would not necessarily provide the desired flexibility and recourse; Ulupono instead suggested that having the indemnification language in the interconnection agreement would allow for negotiating and tailoring the language to each unique project. Hawaiian Electric raised additional concerns that interconnection agreements under other tariffs may need to be rewritten to account for customer microgrids specifically.

The Commission recommends that the Parties decide whether further edits are necessary in the indemnification sections of the Draft Tariff and determine whether indemnification language should be removed from the tariff and instead be included in only the Hybrid Microgrid Operator Interconnection Agreement. The Parties should also evaluate and propose any other necessary changes needed other tariffs to account for customer microgrids.

<u>Proposed Action</u>

- Hawaiian Electric to review and propose changes (if any) for discussion

5) Data set for Feasibility Study

5. <u>Data Set Satisfaction Prior to Conducting the Feasibility Study</u> (Tariff Section D.3.b)

Hawaiian Electric agreed to create a list for this data standard. The Company should create a list of standardized data that will be required of all Applicants of a Hybrid Microgrid who request a feasibility study, incorporate this list in all pertinent documents, and provide all revisions to the Parties for review.

<u>Proposed Action</u>

- Hawaiian Electric to provide for future WG meeting

6) Hybrid Microgrid Compensation

6. <u>Hybrid Microgrid Compensation</u> (Tariff Section E.2)

Hawaiian Electric's consultant acknowledged that leasing has not been discussed significantly in this proceeding and remains a very complicated topic in other jurisdictions. MRC asserted that leasing could be a way to allow Hybrid Microgrids to operate as if they were Customer Microgrids and commented that there will be very few providers that would pursue a Hybrid Microgrid project under the singular arrangement considered in the Draft Tariff. The Parties should discuss the possibility of including language in the Draft Tariff that allows for a leasing arrangement between the Microgrid Operator and the Company for Hybrid Microgrids.

<u>Proposed Action</u>

- MRC and/or Ulupono to present to WG and provide redlines for discussion

7) Hybrid Microgrid Applications Interconnection Queue

7. <u>Hybrid Microgrid Applications Interconnection Queue</u> (Tariff Section G)

Hawaiian Electric clarified that the term "queue" refers to an Interconnection queue for hybrid microgrids. No further action appears necessary regarding this topic.

Proposed Action

- None

8) Project/Program caps, Rated Power

8. <u>Project Caps, Program Caps, and Rated Power</u> (Tariff Sections D.2, I.2, and H.3.a.i)

Hawaiian Electric stated that the Project caps were justified by the size of a feeder being around 3MW, and thus Hawaiian Electric selected a 3MW cap. Hawaiian Electric acknowledged that Molokai and Lanai may not need to be excluded from the Draft Tariff and agreed to discuss this topic with the Parties. Regarding Rated Power, Hawaiian Electric agreed to clarify the reference as it related to the transition from grid connected to islanded mode that required zero power with a nominal margin allowed based upon the generating capability of the Microgrid.

The Parties should evaluate the impacts of increasing (or altogether eliminating) proposed project caps and program caps for all islands. Additionally, the Parties should discuss inclusion of Molokai and Lanai and propose corresponding project caps and program caps for those islands, if necessary.

The Company should revise the definition of Rated Power in the Draft Tariff and accompanying documents in light of the Parties' discussions, or otherwise provide reference to any applicable definition.

<u>Proposed Action</u>

- Hawaiian Electric to review program caps and provide edits to clarify definitions (re: "rated power")

9) Anti-Islanding Provisions

12/10/20 Letter

9. <u>Anti-Islanding Provisions</u> (Tariff Section H.3 paragraph 4)

Hawaiian Electric explained that these provisions were included to allow a transition to island mode whenever the system would otherwise trip offline and stated that it was willing to re-write item (2) to be clearer. The Company should provide its revisions to the Parties for review.

Commission's 12/10/20 Redline

A Customer Microgrid may disconnect from the Company System and transition from Grid-Connected Mode to Island Mode, (1) under any of the Trip or Cease to Energize conditions as required by Rule 14H, Appendix I (e.g., Table 4A-1, Table-4A-4, and Table 4A-5 of Rule 14H, Appendix I) or (2) where anti-islanding conditions are present and where the Generating Facility is required to Cease to Energize and Trip within two seconds where an island may be detected on the Company System. In either of these cases, the Customer Microgrid may transition to Island Mode provided that the Customer Microgrid does not energize any part of the Company System.

Author
Please clarify this provision. Is the intent to refer to anti-islanding provisions of Rule 14H?

<u>Proposed Action</u>

- Hawaiian Electric to provide revision to WG.

10) Hybrid MG Operator Interconnection Agreement

10. Draft Hybrid Microgrid Operator Interconnection Agreement

The Parties are requested to engage in further dialogue on and revise the Draft Hybrid Microgrid Operator Interconnection Agreement to reflect discussion at the Technical Conference. For instance, at the Technical Conference, the Company clarified that a phoneline requirement may not be necessary for Company-owned meters (as specified in Section 1.d.i.B of Exhibit B), as advanced meters could provide the necessary functionalities. In addition, the Company should replace or revise any references to a Soft-Start Ramp Rate (as seen in Section H.3.a.i of the Draft Tariff) to ensure consistency in definitions of ramp rate throughout the Draft Tariff and accompanying documents.

With respect to the Draft Hybrid Microgrid Operator Disclosure Checklist referenced in the Draft Hybrid Microgrid Operator Interconnection Agreement, the Commission has proposed removal of the checklist. At the Technical Conference, the Consumer Advocate emphasized the importance of protecting customers. The Parties should discuss the Consumer Advocate's concerns and work to identify ways to further streamline the Draft Hybrid Microgrid Operator Disclosure Checklist.

The Commission emphasizes the importance of Parties working collaboratively to revise and further streamline the Draft Hybrid Microgrid Operator Interconnection Agreement as this draft does not appear to adequately meet the intent of Act 200.

Proposed Action

- Parties to present, and either provide redlines to the Hybrid Microgrid Operator Interconnection Agreement or an alternate proposal for discussion. Other ideas to resolve within stated deadline?
- Hawaiian Electric will clarify phoneline requirement and soft-start ramp rate references.
- Consumer Advocate to present their position regarding the Disclosure Checklist. Parties to provide alternative proposals to resolve concerns.

11) Draft Modifications to Rule 24 and other DER Programs

11. Draft Modifications to Rule 24 and Other DER Programs for Customer and Hybrid Microgrids

At the Technical Conference, the Company reaffirmed its intent to include the Draft Modifications to Rule 24 in all other applicable DER programs. The Company should identify all such other applicable DER programs ("Other Rules") which are expected to contain redlined language. Further, if there are any additional modifications that need to be made to Rule 24 and the Other Rules (whether broadly applicable or applicable to only a subset of the Rules), the Commission directs the Parties to provide such additional modifications for both Customer and Hybrid Microgrids for review. The Commission requests that the Parties provide redlined versions of the DER tariffs for the Commission's review incorporating the modifications, along with any necessary justifications or comments.

Proposed Action

- Hawaiian Electric will review Commission's redlines, and add them to each existing DER Tariff for WG review.

Action Item List

#	Title	Owner	Action	Target	Status
1	Customer MG Interconnection Agreement	n/a	None	n/a	n/a
2	Definition of Customer	ALL	WG Discuss	1/5	
3	Applicability of other Tariffs (i.e., Rule 15)	MRC	Present to WG	1/5	
4	Indemnification	HECO	Review and propose changes	1/5	
5	Data set for feasibility analysis	HECO	Develop list	1/11	
6	Hybrid MG Compensation	MRC/Ulupono	Present to WG and provide redlines for discussion	1/11	
7	Hybrid MG App Interconnection Queue	n/a	None	n/a	n/a
8	Project/Program Caps, Rated Power	HECO	Review and provide redlines	1/18	
9	Anti-Islanding Provisions	HECO	Review and provide redlines	1/5	
10a	Hybrid MGO Interconnection Agmt	MRC/Others?	Present to WG and provide redlines for discussion	1/11	
10b		HECO	Clarify phoneline and soft-start ramp rate	1/11	
10c		CA	Present position regarding checklist	1/11	
11	Draft Mod to Rule 24 and other DER pgms	HECO	Provide draft of all Tariffs w/ revisions	1/11	

Other items not identified in Items 1-11?

- Open Discussion

Proposed Timeline

TUE Jan. 5 (11am 1pm)

- Customer Definition (discussion)
- Applicability of other Tariffs (MRC presentation)
- Indemnification (HECO redlines)
- Anti-Islanding (HECO redlines)

MON Jan. 11 (11am 1pm)

- Dataset for feasibility analysis
- Hybrid MG Compensation (MRC/Ulupono presentation)
- Hybrid MG Interconnection Agreement (MRC/Ulupono redlines & presentation, CA presentation)
- Draft mod to all DER tariffs (HECO redlines)

MON Jan. 18 (11am 1pm)

- Project/Program Caps, Rated Power (HECO redlines)
- Other unresolved items

WED Jan. 20 (11am 1pm)

- Unresolved items

MON Jan. 25

- Working Group filing due

Mahalo for your time.

https://www.hawaiianelectric.com/about-us/our-vision-and-commitment/resilience/microgrid-services-tariff

Hawaiian Electric

Working Group Meeting

Meeting Name	Date of Meeting
Microgrid Services Tariff Working Group Meeting	December 21, 2020

Agenda

Introduction	• Objective of the meeting to get agreement on the proposed actions to meet the deadline of Jan. 25, 2021 to provide a revision to the Tariff and accompanying documents. • Presented slide deck reviewing PUC guidance from 12/10/20 letter.
Commission's Guidance (Slide 3-16)	• WG members agreed with actions as proposed, with the exception of #10 (Hybrid Microgrid Operator Interconnection Agreement). o WG members modified the action to include a review of B. Brown's (MRC) comments sent via email on 12/21/20 to Working Group. Parties will review comments, and discuss action plan at the next WG meeting (1/5/20). o Clarification for action item 10C (disclosure checklist), which WG members will provide alternative proposals (if any) after the Consumer Advocate's presentation (on 1/11/20).
Other Items not identified in items 1-11 (Slide 17)	• WG lead (K. Aramaki) added that the Commission's redlines need to be reviewed by all parties. In particular, Hawaiian Electric will need to review the Commission's revision of the "Microgrid" definition (Sec. A.1.v.). • WG lead (M. Chang) raised a question that several items being contemplated within this WG continuation were already placed in the Parking Lot by the WG. • No other topics raised by WG members.
Next Steps (Slide 18)	• Meetings to be scheduled on: o Jan. 5, Jan. 11, Jan. 18, Jan. 20
Working Group Parking Lot (Added for reference)	• Change of ownership of Microgrid • Standby Charges or Exit Fees • Customer protection-related considerations • Microgrid/IGP procurement considerations • Considerations of gaming between utility-owned and 3rd-party MGs • Army/Military MG issues such as WG will consider nested microgrids, if appropriate • Interactions with other dockets o DER Tariff/Programs o IGP Resiliency • Consideration of societal, environmental value • Development of PPA model for hybrid MGs

Hawaiian Electric

Working Group Meeting

	• Other types of microgrids that don't fit Act 200 definition • Gap in tariff for customers greater than 100kW participation & compensation in non-normal, non-island scenarios. Eg, SIA • Harmonize compensation with other grid service mechanisms o Expanded functionality from MG service and whether should be included in MST. • Contractual obligations for other grid services – Customers with existing DER/DR obligations still need to meet performance if included in a MG. • Customer approvals – Does a Hybrid MG need a full customer subscription?

Working Group Chairs:		
Marcey Chang, DCCA	Chair, Market Facilitation and Interconnection WG	mchang@dcca.hawaii.gov
Marc Asano, HE	Chair, Interconnection WG	marc.asano@hawaiianelectric.com
Ken Aramaki, HE	Chair, Market Facilitation WG	ken.aramaki@hawaiianelectric.com

Attendees:		
Anand Samtani, Hawaii PUC	Brittany Blair, Newport Consulting	Gerald Sumida, Carlsmith Ball
Andrew Nojiri, HE	Craig Nakanishi, Cades Schutte	Gina Yi, Hawaii PUC
Andrew Okabe, Hawaii PUC	Darene Matsuoka, Cades Schutte	Jennifer Potter, Hawaii PUC
Ashley Agcaoili, Hawaii PUC	Earlynne Maile, HE	Paul De Martini, Newport Consulting
Baird Brown, eco(n)law LLC	Eric Kunisaki, HE	

Hawaiian Electric

Microgrid Services Tariff Working Group

January 5, 2021

Agenda

- Revisit Action Item List
- Customer Definition (discussion)
- Applicability of other Tariffs (MRC presentation)
- Indemnification (HECO redlines)
- Anti-Islanding (HECO redlines)
- Hybrid Interconnection Agmt (Discuss plan to resolve)
- Next Steps

Action Item List

#	Title	Owner	Action	Target	Status
1	Customer MG Interconnection Agreement	n/a	None	n/a	n/a
6	Hybrid MG Compensation	MRC/Ulupono	Present to WG and provide redlines for discussion	1/11	
7	Hybrid MG App Interconnection Queue		None		
8	Project/Program Caps, Rated Power	HECO	Review and provide redlines		
	Anti-Islanding Provisions				
10b	Hybrid MGO Interconnection Agmt				
10c		CA	Present position regarding checklist	1/11	
11					

Hawaiian Electric

Customer Definition Discussion

2) Definition of Customer

12/10/20 Letter

2. Definition of the Customer (Tariff Sections A.1.g and E.1.a)

MRC explained that its proposed edits to the Tariff section A.1.g stem from concerns about variety of different relationships that a Microgrid Operator could have with Microgrid Participants, and that so long as the definition does not preclude a third party Microgrid Operator that is different than the Microgrid Owner the definition does not need to be updated. MRC agreed that this concept should be clarified in Section E.1.a. Ulupono Initiative stated that the definition of customer may still be problematic, but agreed that Section E.1.a needed further clarification. The Parties should discuss MRC's redlines to the definition of Customer in the Draft Tariff (which includes the Microgrid Operator of a Customer Microgrid in the definition) and revise the definition accordingly. In doing so, the Parties should consider the roles of the owner of a Microgrid and the Microgrid Operator, any applicable laws in Hawaii, and determine whether a distinction should be made between these roles in the Tariff.

MRC's Redline

g. "Customer" or "Customers" used herein is as defined in Company Rule No. 1. and includes the Microgrid Operator of a Customer Microgrid.

Proposed Actions

- WG members to discuss at next meeting

HECO's Proposed Changes

- "Customer" definition to remain as is to maintain consistency with Tariff Rules
- Added "Customer-Generator" consistent with DER Rules and HRS269-101

g. "Customer" or "Customers" used herein is as defined in Company Rule No. 1.

h. "Customer-Generator" or "Eligible Customer-Generator" means a metered residential or commercial customer, including a government entity, of an electric utility who owns and operates a solar, wind turbine, biomass, or hydroelectric energy generating facility, or a hybrid system consisting of two or more of these facilities, that is:

a. Located on the customer's premises;
b. Operated in parallel with the utility's transmission and distribution facilities;
c. In conformance with the utility's interconnection requirements provided in Rule 14, Section H; and
~~a.~~d. Intended primarily to offset part or all of the customer's own electrical requirements.

Author
For MRC: what is the reason for proposed changes to defintion of "Customer"?

- Added "Microgrid Aggregator"

~~u.~~x. "Microgrid Aggregator" means a third-party aggregator that coordinates control of distributed resources, including project resources and any demand side management resources, consistent with relevant provisions of Rule No. 2, including frequency and voltage and other power quality requirements established within applicable interconnection agreements.

- Included "Customer-Generator" and "Microgrid Aggregator" to MGO

~~w.~~z. "Microgrid Operator" means the operator of a Customer Microgrid or Hybrid Microgrid. A Microgrid Operator may include a Customer-Generator or Microgrid Aggregator, as defined in this Rule.

- Alignment with Section E Billing and Compensation

E. BILLING AND COMPENSATION

1. Compensation for Customer Microgrids.

a. For a Customer Microgrid, ~~the Microgrid Operator is a Company Customer and~~ all applicable energy credit rates and compensation under existing applicable programs, Customer tariff(s), and rate schedules will apply to the Eligible Customer-Generator ~~Microgrid Operator~~ of the Customer Microgrid during Grid-Connected Mode.

Author
Is this applicable if the Microgrid Operator is third party contracted by Customer?

Hawai'i Public Utility Commission
Microgrid Services Tariff Working Group

Proposed Tariff Section B. 3.

Presentation on behalf of:

Microgrid Resources Coalition

C. Baird Brown
eco(n)law

Tariff Section B.3.

3. For Customer Microgrids and Hybrid Microgrids, existing tariffs and programs shall also be applicable. However, a Customer Microgrid shall not be subject to Rule 15. In addition, any Company Rule which requires that Generating Facilities be owned by a Customer or located on Customer premises to be eligible shall be deemed to include all Generating Facilities that are behind the Point of Common Coupling of a Customer Microgrid and under the operating control of the Microgrid Operator.

Problems with the Draft

- Rule 15 can prevent operation of multi-facility or third party operated microgrid if it imports any power.
- Other rules that authorize purchases of power from a distributed generator are limited to resources owned or leased by a customer and located on customer's premises.

Rule 15

A. SEPARATE PREMISES

Where the Company has adequate service facilities to supply separate premises, two or more separate premises, even though owned, leased or operated by the same customer, will not be supplied with electric energy through the same meter.

* * * *

B. RESALE OF ELECTRIC ENERGY

The customer shall not resell any of the electric energy received by him from the Company, except for use solely as motor fuel for light duty plug-in electric vehicles. A light-duty vehicle is defined as a passenger car or passenger car derivative capable of seating 12 passengers or less.

Rule 22 (and 23, 24, 25, 27)

A. ELIGIBLE CUSTOMER-GENERATOR

Customer Self-Supply service is available to permanent customers ("Eligible CustomerGenerator") who own (or lease from a third party) and operate (or contract to operate with a third party) a solar generating facility ("Generating Facility" or "Self-Supply System"), with a capacity of not more than one hundred kilowatts (100 kW), and where:

1. The Generating Facility, which may include an energy storage system, is located on the Eligible Customer-Generator's premises. . . .

Tariff Section 3 Revised Proposal

3. For Customer Microgrids and Hybrid Microgrids, existing tariffs and programs
shall also be applicable subject to the following:

a. Notwithstanding Rule 15, A Microgrid Operator may resell electric energy received from the Company to (i) other persons within the electrical boundaries of the microgrid who have contracted to receive regular service from the microgrid and (ii) the Company; and
b. Any Company Rule or program which requires that Generating Facilities be owned or leased by a Customer or located on Customer premises to be eligible shall be deemed to include all Generating Facilities that are (i) behind the Point of Common Coupling of a Customer Microgrid and under the operating control of the Microgrid Operator and (ii) otherwise comply with the requirements of the rule or program.

Other Questions

- What happens if a microgrid contains resources that are program-eligible and others which are not, such as fossil fuel supplemental power?
- What happens if behind the meter battery storage is charged with grid power?
- Is there a way that non-utility scale distributed resources can sell power or services to the grid?

Discussion

C. Baird Brown
eco(n)law LLC
230 S. Broad Street, 17th Floor
Philadelphia, PA 19102
p. 215-586-6615
baird@eco-n-law.net

"The economy is a subset of the ecology"

Hawaiian Electric

Indemnification

4) Indemnification

4. <u>Indemnification</u> (Tariff Sections C.1-2)

Hawaiian Electric favored including indemnification language in the tariff, at least as a starting point, in order to account for the variety of possible structures behind the meter and corresponding relationships. However, Ulupono asserted that having the indemnification language in the tariff would not necessarily provide the desired flexibility and recourse; Ulupono instead suggested that having the indemnification language in the interconnection agreement would allow for negotiating and tailoring the language to each unique project. Hawaiian Electric raised additional concerns that interconnection agreements under other tariffs may need to be rewritten to account for customer microgrids specifically.

The Commission recommends that the Parties decide whether further edits are necessary in the indemnification sections of the Draft Tariff and determine whether indemnification language should be removed from the tariff and instead be included in only the Hybrid Microgrid Operator Interconnection Agreement. The Parties should also evaluate and propose any other necessary changes needed other tariffs to account for customer microgrids.

<u>Proposed Action</u>

- Hawaiian Electric to review and propose changes (if any) for discussion

HECO Proposed Changes (Tariff)

- Pink – Commission Edits
- Blue – HECO Proposed

- Section C to remain in Tariff and Interconnection Agreement
  - Inclusion in Tariff will help to set non-negotiable items

- Revision to Sec. C.3 and C.4

C. RESPONSIBILITIES AMONG THE PARTIES

1. A Microgrid Operator of a Customer Microgrid shall at all times indemnify, defend and hold harmless Company from any and all damages, losses, claims and actions, including, without limitation, reasonable attorneys' fees and costs, and all expenses incidental to such losses, damages, claims or actions, based upon or arising out of damage to property or injuries to persons (including death) in any way arising out of or related to the Customer Microgrid, except to the extent that such damages, losses, claims, or actions were directly caused by the negligence or willful misconduct of the Company.

2. A Microgrid Operator of a Hybrid Microgrid shall at all times indemnify, defend and hold harmless Company from any and all damages, losses, claims and actions, including, without limitation, reasonable attorneys' fees and costs, and all expenses incidental to such losses, damages, claims or actions, based upon or arising out of damage to property or injuries to persons (including death) in any way arising out of or related to the Hybrid Microgrid Facility, Microgrid Operator's performance of its obligations under the Interconnection Agreement, the operation or maintenance of the Hybrid Microgrid during Island Mode, and/or Company's actions taken in accordance with the Interconnection Agreement, except to the extent that such damages, losses, claims, or actions were directly caused by the negligence or willful misconduct of the Company.

~~3. Limitation of Liability - Customer Microgrids. The Company shall not be responsible for claims and/or damages arising out of or related to the Customer Microgrid, except to the extent directly caused by the negligence or willfull misconduct of Company; provided that the Company is not excused for failure to perform in accordance with its contracts, tariffs or applicable law.~~ Limitation of Liability - Customer Microgrids. The Company shall not be responsible for claims and/or damages arising out of or related to the Customer Microgrid, except to the extent directly caused by the negligence or willful misconduct of Company.

~~4. Limitation of Liability - Hybrid Microgrids. The Company shall not be responsible for any claims or damages of any Participant or Microgrid Operator arising out of or related to (a) the Hybrid Microgid Facility and/or the operation or maintenance of the Hybrid Microgrid occurring during Island Mode, and/or (b) Company's exercise of rights and obligations with respect to any Generating Facility and/or Customer within the Hybrid Microgrid, whether in Grid-Connected or Island Mode, except to the extent directly caused by the negligence or willful misconduct of Company; provided that the Company is not excused for failure to perform in accordance with its contracts, tariffs or applicable law.~~ Limitation of Liability - Hybrid Microgrids. The Company shall not be responsible for any claims or damages of any Participant or Microgrid Operator arising out of or related to (a) the Hybrid Microgid Facility and/or the operation or maintenance of the Hybrid Microgrid occurring during Island Mode, and/or (b) Company's exercise of rights and obligations with respect to any Generating Facility and/or Customer within the Hybrid Microgrid, whether in Grid-Connected or Island Mode.

HECO Proposed Changes (Hybrid MG Int Agmt)

- Pink – Commission Edits
- Purple/Brown/Blue – HECO Proposed

- Sec. 13.a.i and 13.a.iii strike-through
  - failure to perform is negligence or willful misconduct.

13. Limitation of Liability; Indemnification.

(a) Limitation of Liability

(i) Company shall bear no liability and shall have no responsibility to Microgrid Operator or any Hybrid Microgrid Participant for any action(s) taken by Company in accordance with this Agreement, including without limitation, Section 10 (Continuity of Service) or Section 11 (Personnel and System Safety), or in accordance with Company's Customer Interconnection Agreement with respect to any Generating Facility within the Hybrid Microgrid, except to the extent of damages directly caused by the negligence or willful misconduct of Company~~; provided that the Company is not excused for failure to perform in accordance with its contracts, tariffs or applicable law.~~.

(ii) Notwithstanding any other provision in this Agreement to the contrary, with respect to Company's provision of electric service to any Customer including the Microgrid Operator, any Company liability to such Customer shall be limited as set forth in the Company's tariffs and terms and conditions for electric service, and shall not be affected by the terms of this Agreement.

~~(ii)~~(iii) The Company shall not be responsible for any claims or damages of any Participant or Microgrid Operator arising out of or related to (a) the Hybrid Microgrid Facility and/or the operation or maintenance of the Hybrid Microgrid occurring during Island Mode, and/or (b) Company's exercise of rights and obligations with respect to any Generating Facility and/or Customer within the Hybrid Microgrid, whether in Grid-Connected or Island Mode, except to the extent directly caused by the negligence or willful misconduct of Company~~; provided that the Company is not excused for failure to perform in accordance with its contracts, tariffs or applicable law.~~.

(b) Indemnification.

(i) Microgrid Operator shall at all times indemnify, defend and hold harmless Company from any and all damages, losses, claims and actions, including, without limitation, reasonable attorneys' fees and costs, and all expenses incidental to such losses, damages, claims or actions, based upon or arising out of damage to property or injuries to persons (including death) in any way arising out of or related to the Hybrid Microgrid Facility, Microgrid Operator's performance of its obligations under ~~the~~ this Agreement, the operation or maintenance of the Hybrid Microgrid during Island Mode, and/or Company's actions taken in accordance with this Agreement, including Section 10 (Continuity of Service) or Section 11 (Personnel and System Safety), except to the extent that such damages, losses, claims, or actions were directly caused by the negligence or willful misconduct of Company.

~~(iii)~~(ii) Company shall at all times indemnify, defend and hold harmless Microgrid Operator from any and all damages, losses, claims and actions, including, without limitation, reasonable attorneys' fees and costs, and all expenses incidental to such losses, damages, claims or actions, based upon or arising out of damage to property or injuries to persons (including death) in any way arising out of or related to the Company's ~~Hybrid Microgrid Facility, Microgrid Operator's~~ performance of its obligations under this Agreement, ~~the operation or maintenance of the Hybrid Microgrid during Island Mode, and/or Company's actions taken in accordance with this Agreement, including Section 10 (Continuity of Service) or Section 11 (Personnel and System Safety),~~ except to the extent that such damages, losses, claims, or actions were directly caused by the negligence or willful misconduct of Microgrid Operator and/or Participant.

Hawaiian Electric

Anti-Islanding Provisions

9) Anti-Islanding Provisions

12/10/20 Letter

9. <u>Anti-Islanding Provisions</u> (Tariff Section H.3 paragraph 4)

Hawaiian Electric explained that these provisions were included to allow a transition to island mode whenever the system would otherwise trip offline and stated that it was willing to re-write item (2) to be clearer. The Company should provide its revisions to the Parties for review.

Commission's 12/10/20 Redline

A Customer Microgrid may disconnect from the Company System and transition from Grid-Connected Mode to Island Mode, (1) under any of the Trip or Cease to Energize conditions as required by Rule 14H, Appendix I (e.g., Table 4A-1, Table-4A-4, and Table 4A-5 of Rule 14H, Appendix I) or (2) where anti-islanding conditions are present and where the Generating Facility is required to Cease to Energize and Trip within two seconds where an island may be detected on the Company System. In either of these cases, the Customer Microgrid may transition to Island Mode provided that the Customer Microgrid does not energize any part of the Company System.

Author
Please clarify this provision. Is the intent to refer to anti-islanding provisions of Rule 14H?

<u>Proposed Action</u>

- Hawaiian Electric to provide revision to WG.

HECO Proposed Changes

A Customer Microgrid may disconnect from the Company System and transition from Grid-Connected Mode to Island Mode, (1) under any of the Trip or Cease to Energize conditions as required by Rule 14H, Appendix I (e.g., Table 4A-1, Table-4A-4, and Table 4A-5 of Rule 14H, Appendix I) or (2) where anti-islanding[2] conditions are present and where the Generating Facility is required to Cease to Energize and Trip within two seconds where an island may be detected on the Company System. In either of these cases, the Customer Microgrid may transition to Island Mode provided that the Customer Microgrid does not energize any part of the Company System.

Author
Please clarify this provision. Is the intent to refer to anti-islanding provisions of Rule 14H?

- Added footnote to reference IEEE 1547-2018. No other changes to Commission's redlines.

[2] Per Section 8.1 of IEEE 1547-2018, "For an unintentional island in which the DER energizes a portion of the Area EPS through the PCC, the DER shall detect the island, cease to energize the Area EPS, and trip within 2 s[econds] of the formation of an island."

Hawaiian Electric

MRC Comments to Hybrid Int Agreement

Proposal

- Line by Line review of Hybrid MG Interconnection Agreement to discuss MRC's comments
- To be scheduled in future WG meeting – Jan. 14?

Hawaiian Electric

Next Steps

Action Item List

#	Title	Owner	Action	Target	Status
1	Customer MG Interconnection Agreement	n/a	None	n/a	n/a
6	Hybrid MG Compensation	MRC/Ulupono	Present to WG and provide redlines for discussion	1/11	
7	Hybrid MG App Interconnection Queue		None		
8	Project/Program Caps, Rated Power	HECO	Review and provide redlines		
	Anti-Islanding Provisions				
10b	Hybrid MGO Interconnection Agmt				
10c		CA	Present position regarding checklist	1/11	
11					

Other items not identified in Items 1-11?

- Discuss PUC Redlines
  - Removal of “emergency events” from MG definition
- What action items should be placed (back to) the “parking lot”?

Proposed Timeline

TUE Jan. 5 (11am 1pm)

- Customer Definition (discussion)
- Applicability of other Tariffs (MRC presentation)
- Indemnification (HECO redlines)
- Anti-Islanding (HECO redlines)
- Hybrid Interconnection Agmt (Discuss plan to resolve)

MON Jan. 11 (11am 1pm)

- Dataset for feasibility analysis
- Hybrid MG Compensation (MRC/Ulupono presentation)
- Hybrid MG Interconnection Agreement (~~MRC/Ulupono redlines & presentation,~~ CA presentation – Disclosure Checklist)
- Draft mod to all DER tariffs (HECO redlines)

THURS Jan. 14 (11am 1pm)

- Project/Program Caps, Rated Power (HECO redlines)
- Hybrid MG Interconnection Agreement (Line by Line Review)
- Other unresolved items

WED Jan. 20 (11am 1pm)

- Unresolved items

MON Jan. 25

- Working Group filing due

Mahalo for your time.

https://www.hawaiianelectric.com/about-us/our-vision-and-commitment/resilience/microgrid-services-tariff

Meeting Name	Date of Meeting
Microgrid Services Tariff Working Group Meeting	January 5, 2021

Agenda

Introduction and Action Item List (Slides 1-3)	• Meeting scheduled on 1/18/21 to be rescheduled to 1/14/21. WG requested time change to start later in the day. • Based on above change, typo noted on date for Action Item #8 (Project/Program caps, rated power) should be 1/14/21.
Definition of Customer (Slides 4-6)	• HECO proposed changes to definitions (slide 6) as an alternative to MRC's changes to the definition of "Customer". MRC further clarified changes not needed to definitions, but a consideration to changes to Section E Billing & Compensation be made to address Customer MGOs. • **Action Item: HECO to propose changes for MRC's review.**

MRC's proposed Tariff Section B.3 (Slides 7-14)	• MRC (B. Brown) presented its position on exempting Rule 15 for Customer MGs.
	  o MRC clarified its main concern is multi-customer microgrids, and removing barriers for development of Customer MGs. MRC's interpretation of Rule 15 is such that an MGO of a multi-customer MG is unable to import energy from the utility as needed, and thus unable to allocate/pass on costs to customers within the MG.
	  ▪ MRC further clarified its intent is not to charge more to customers within the customer MG than what is paid to the Company.
	  o HECO and the CA provided their positions that exempting MGs from specific Rules, such as Rule 15, may be problematic and have unintended consequences. One potential example was that it may create situations where a customer claims to be a customer MG, and sell Company energy directly to adjacent customers (a form of wheeling).
	  o HECO further clarified that Rule 15 may still allow for the scenarios identified by MRC. The CA also noted that the second part in Section A of Rule 15 seems to allow for the scenarios identified by MRC. Discussion within the WG suggested that it was generally allowable to allocate costs for energy served by the Company within a multi-customer MG, but exemption from Rules may not be appropriate.
	  o **Action Item: HECO to revise MRC's proposed language (slide 12) for MRC review.**
	• MRC clarified and WG agreed retail wheeling is not needed to enable either customer MG or hybrid MG under the revised language.

	• MRC discussed changes to Rule 22-27 & 27 (slide 11). Revision may not be needed if addressed in Section E of Tariff (Action Item #1).

Indemnification (Slides 15-18)	• HECO provided its proposed changes to the Indemnification section within the Microgrid Services Tariff, as well as the Hybrid MG Interconnection Agreement.
	• HECO explained the Indemnification Section should remain within the Tariff and the Interconnection Agreement.
	  o WG members acknowledged there was no need to remove the section from the Tariff.
	• HECO struck-through "provided that the Company is not excused for failure to perform in accordance with its contracts, tariffs or applicable law" as it seemed redundant to preceding language.
	  o MRC explained the preceding language does not clearly cover what was proposed.
	  o **Action Item: HECO will provide additional language to address discussion for MRC review.**
	• Tariff Section C. 4 – WG member pointed out "except to the extent directly caused by the negligence or willful misconduct of Company" was inadvertently struck-through. Language will be added back into the document.
	• Hybrid MG Interconnection Agreement Section 13.b.ii. HECO provided changes to clarify indemnification.
	  o **Action Item: PUC to review and revise as needed.**

Anti-Islanding Provisions (Slides 19-21)	• HECO provided its revision to provide more clarity on anti-islanding. HECO added a footnote citing a section within IEEE1547. • **Action Item: WG to confirm language appropriate in next WG meeting.**
MRC Comments to Hybrid MG Interconnection Agreement (Slides 22-23)	• HECO proposed line by line review of Hybrid MG Interconnection Agreement commencing on Jan. 14. WG agreed to this approach.
Next Steps (Slide 24-27	• Meetings scheduled Jan. 11, 14, 20.
Working Group Parking Lot (Added for reference)	• Change of ownership of Microgrid • Standby Charges or Exit Fees • Customer protection-related considerations • Microgrid/IGP procurement considerations • Considerations of gaming between utility-owned and 3rd-party MGs • Army/Military MG issues such as WG will consider nested microgrids, if appropriate

	• Interactions with other dockets
	  o DER Tariff/Programs
	  o IGP Resiliency
	• Consideration of societal, environmental value
	• Development of PPA model for hybrid MGs
	• Other types of microgrids that don't fit Act 200 definition
	• Gap in tariff for customers greater than 100kW participation & compensation in non-normal, non-island scenarios. Eg, SIA
	• Harmonize compensation with other grid service mechanisms
	  o Expanded functionality from MG service and whether should be included in MST.
	• Contractual obligations for other grid services – Customers with existing DER/DR obligations still need to meet performance if included in a MG.
	• Customer approvals – Does a Hybrid MG need a full customer subscription?

Working Group Chairs:		
Marcey Chang, DCCA	Chair, Market Facilitation and Interconnection WG	mchang@dcca.hawaii.gov
Marc Asano, HE	Chair, Interconnection WG	marc.asano@hawaiianelectric.com
Ken Aramaki, HE	Chair, Market Facilitation WG	ken.aramaki@hawaiianelectric.com

Attendees:		
Anand Samtani, Hawaii PUC	Brittany Blair, Newport Consulting	Gerald Sumida, Carlsmith Ball
Andrew Nojiri, HE	Craig Nakanishi, Cades Schutte	Gina Yi, Hawaii PUC
Andrew Okabe, Hawaii PUC	Darene Matsuoka, Cades Schutte	Layla Kilolu, Hawaii PUC
Ashley Agcaoili, Hawaii PUC	Earlynne Maile, HE	Paul De Martini, Newport Consulting
Baird Brown, eco(n)law LLC	Eric Kunisaki, HE	Tracie Black, HE

Hawaiian Electric

Microgrid Services Tariff Working Group

January 11, 2021

Agenda

- Revisit Action Item List
- Today's Focus
  - Data Set for Feasibility Analysis
  - Hybrid MG Compensation (MRC/Ulupono)
  - Hybrid MGO IA – Clarify phoneline req't and soft-start ramp rate
  - Hybrid MGO IA – Checklist Discussion (CA)
  - DER Tariff Changes
- Next Steps

Action Item List

#	Title	Owner	Action	Target	Status
1	Customer MG Interconnection Agreement	n/a	None	n/a	n/a
2	Definition of Customer	ALL	WG Discuss	1/5	Open
3	Applicability of other Tariffs (i.e., Rule 15)	MRC	Present to WG	1/5	Open
4	Indemnification	HECO	Review and propose changes	1/5	Open
5	Data set for feasibility analysis	HECO	Develop list	1/11	
6		MRC/Ulupono			
7	Hybrid MG App Interconnection Queue	n/a	None		n/a
8	Project/Program Caps, Rated Power	HECO	Review and provide redlines		
9	Anti-Islanding Provisions	HECO	Review and provide redlines		Closed
10a	Hybrid MGO Interconnection Agmt	ALL	Review MRC Comments – IA Walk-through		
10b			Clarify phoneline and soft-start ramp rate		
10c					
11	Draft Mod to Rule 24 and other DER pgms				

Hawaiian Electric

Data Set for Feasibility Study

5) Data set for Feasibility Study

5. <u>Data Set Satisfaction Prior to Conducting the Feasibility Study</u> (Tariff Section D.3.b)

Hawaiian Electric agreed to create a list for this data standard. The Company should create a list of standardized data that will be required of all Applicants of a Hybrid Microgrid who request a feasibility study, incorporate this list in all pertinent documents, and provide all revisions to the Parties for review.

<u>Proposed Action</u>

- Hawaiian Electric to provide for future WG meeting

HECO Proposed Changes to Hybrid MGO IA

- Hybrid MGO Interconnection Agreement Exhibit A includes information needed to commence with Feasibility Study
- Supplemented Exhibit A with:
  - Map showing defined electrical boundaries
  - Identification of nearest protective devices on the customer side
  - (if available) the generator's reactive capability curve

EXHIBIT A

DESCRIPTION OF HYBRID MICROGRID

1. Microgrid Operator Information

Name (print): _____

Property Address: _____

City: _____ State: _____ Zip: _____

Meter # (if applicable): _____ TMK: _____

Phone: _____ Cell: _____ Email: _____

☐ Mailing Address is the same as the Property Address

Mailing Address: _____

City: _____ State: _____ Zip: _____

Name of Person Authorized to Sign on behalf of Microgrid Operator:

_____

Hawaii Gross Excise Tax License Number of Microgrid Operator:

_____

Description of the electrical boundaries of the Hybrid Microgrid:

_____

_____

_____ (use additional sheet if necessary)

4. General Hybrid Microgrid Technical Information (Attached)

The attached technical information should clearly describe and illustrate the defined electrical boundaries of the proposed Hybrid Microgrid.

☐ **Microgrid Single Line Diagram**

☐ **Microgrid Three Line Diagram**

☐ **Microgrid Relay List and Trip Scheme** (if applicable)

☐ **Map Showing Defined Electrical Boundaries**

Protection Devices ☐ Not Applicable

Interconnection Location (Service Address)	Nearest Customer Protective Device Type	Manufacturer	Model

Generator Reactive Capability Curve (if available) ☐ Not Applicable

Attach copy of Generator Reactive Capability Curve

Hawaiian Electric

Hybrid MG Compensation

MRC & Ulupono

6) Hybrid Microgrid Compensation

6. <u>Hybrid Microgrid Compensation</u> (Tariff Section E.2)

Hawaiian Electric's consultant acknowledged that leasing has not been discussed significantly in this proceeding and remains a very complicated topic in other jurisdictions. MRC asserted that leasing could be a way to allow Hybrid Microgrids to operate as if they were Customer Microgrids and commented that there will be very few providers that would pursue a Hybrid Microgrid project under the singular arrangement considered in the Draft Tariff. The Parties should discuss the possibility of including language in the Draft Tariff that allows for a leasing arrangement between the Microgrid Operator and the Company for Hybrid Microgrids.

<u>Proposed Action</u>

- MRC and/or Ulupono to present to WG and provide redlines for discussion

Three Hybrid Microgrid Models

- Draft Tariff Model
- Community Solar Model
- Customer Microgrid Model
- In each model Participant billing is the same in both grid connected and islanded mode

Draft Tariff Model

- Participants are customers of the company
- Microgrid Operator operates all controllable generation within the microgrid, sells all power output to Company in accordance with a power purchase agreement
- Company bills Participants for their entire usage at regular rates

“Community Solar Model”

- Participants are Customers of the Company
- Microgrid Operator operates all included generation for the Benefit of the Participants
- Microgrid Operator allocates deliveries of power (net of exports) and calculates charges for power to Participants per the Microgrid Operator’s contract with participants
- Company bills the allocated amount of power at the Microgrid operator’s price to participants, and bills at regular rates for any remaining usage

“Customer Microgrid Model”

- Microgrid Operator has a joint operating agreement with the Company for use of wires behind the PCC
- It imports and exports power at the PCC as a Customer
- Participants are not Customers
- Microgrid Operator bills Participants in accordance with their contract, passing through the cost of imported power
- Company could act as meter reader and billing agent in accordance with the joint operating agreement

MRC/Ulupono Proposed Changes

E. BILLING AND COMPENSATION

1. Compensation for Customer Microgrids.

   a. For a Customer Microgrid, all applicable energy credit rates and compensation under existing applicable programs, Customer tariff(s), and rate schedules will apply to the Microgrid Operator during Grid-Connected mode.

2. Compensation for Hybrid Microgrid Operator and Microgrid Participants.

   a. For a Hybrid Microgrid Operator and all Microgrid Participants, all applicable energy credit rates and compensation will apply during Grid-Connected Mode and Island Mode. While operating in Island Mode, all existing applicable Customer tariffs and programs shall remain in effect and all energy delivered and sold within the Microgrid during the period will be deemed transacted with the Company pursuant to the tariffs.

   b. Any Generating Facility with an appropriate Customer Interconnection Agreement executed with the Company and supplying energy to a Hybrid Microgrid during Island Mode, and without an existing means for compensation by the utility (e.g., PPA, tariff), shall be compensated by Energy Credit Rates as defined and outlined in Rule No. 24.

   c. For a Hybrid Microgrid in which Microgrid Participants are also Customers, Customers within such ~~a~~ Hybrid Microgrid shall be billed monthly by the Company for (i) the portion of the energy supplied to the Customer by the Company, in accordance with Rule No. 8, the applicable rate schedule, and Company's rules filed with the Commission, and (ii) the portion of the energy supplied to the Customer by the Microgrid Operator, in accordance with the agreement executed by the Microgrid Operator and the Microgrid Participant. The Company thereafter pays the Microgrid Operator for the portion of the energy supplied by the Microgrid Operator at the rate charged by the Microgrid Operator to the Customers.

   d. For a Hybrid Microgrid in which the Microgrid Participants are not Customers, Microgrid Participants shall be billed monthly by the Microgrid Operator for (i) the portion of the energy supplied to the Microgrid Operator by the Company, in accordance with Rule 8, the applicable rate schedule, and Company's rules filed with the Commission, and (ii) the portion of the energy supplied to the Microgrid Participants from any Microgrid Generating Facility operated by the Microgrid Operator, in accordance with the agreement executed by the Microgrid Operator and the Microgrid Participant. The Microgrid Operator and the Company may enter into an agreement whereby the Company will perform the meter reading and billing as a service to the Microgrid Operator.

c. For a Hybrid Microgrid in which Microgrid Participants are also Customers, Customers within such ~~a~~ Hybrid Microgrid shall be billed monthly by the Company for (i) the portion of the energy supplied to the Customer by the Company, in accordance with Rule No. 8, the applicable rate schedule, and Company's rules filed with the Commission, and (ii) the portion of the energy supplied to the Customer by the Microgrid Operator, in accordance with the agreement executed by the Microgrid Operator and the Microgrid Participant. The Company thereafter pays the Microgrid Operator for the portion of the energy supplied by the Microgrid Operator at the rate charged by the Microgrid Operator to the Customers.

d. For a Hybrid Microgrid in which the Microgrid Participants are not Customers, Microgrid Participants shall be billed monthly by the Microgrid Operator for (i) the portion of the energy supplied to the Microgrid Operator by the Company, in accordance with Rule 8, the applicable rate schedule, and Company's rules filed with the Commission, and (ii) the portion of the energy supplied to the Microgrid Participants from any Microgrid Generating Facility operated by the Microgrid Operator, in accordance with the agreement executed by the Microgrid Operator and the Microgrid Participant. The Microgrid Operator and the Company may enter into an agreement whereby the Company will perform the meter reading and billing as a service to the Microgrid Operator.

Hawaiian Electric

Hybrid MGO Interconnection Agreement

Action Item 10B: Clarify phoneline requirement and soft-start ramp rate references

Action Item 10C: Present position regarding checklist

10) Hybrid MG Operator Interconnection Agreement

10. Draft Hybrid Microgrid Operator Interconnection Agreement

The Parties are requested to engage in further dialogue on and revise the Draft Hybrid Microgrid Operator Interconnection Agreement to reflect discussion at the Technical Conference. For instance, at the Technical Conference, the Company clarified that a phoneline requirement may not be necessary for Company-owned meters (as specified in Section 1.d.i.B of Exhibit B), as advanced meters could provide the necessary functionalities. In addition, the Company should replace or revise any references to a Soft-Start Ramp Rate (as seen in Section H.3.a.i of the Draft Tariff) to ensure consistency in definitions of ramp rate throughout the Draft Tariff and accompanying documents.

With respect to the Draft Hybrid Microgrid Operator Disclosure Checklist referenced in the Draft Hybrid Microgrid Operator Interconnection Agreement, the Commission has proposed removal of the checklist. At the Technical Conference, the Consumer Advocate emphasized the importance of protecting customers. The Parties should discuss the Consumer Advocate's concerns and work to identify ways to further streamline the Draft Hybrid Microgrid Operator Disclosure Checklist.

The Commission emphasizes the importance of Parties working collaboratively to revise and further streamline the Draft Hybrid Microgrid Operator Interconnection Agreement as this draft does not appear to adequately meet the intent of Act 200.

Proposed Action

- Parties to present, and either provide redlines to the Hybrid Microgrid Operator Interconnection Agreement or an alternate proposal for discussion. Other ideas to resolve within stated deadline?
- Hawaiian Electric will clarify phoneline requirement and soft-start ramp rate references.
- Consumer Advocate to present their position regarding the Disclosure Checklist. Parties to provide alternative proposals to resolve concerns.

HECO Proposal to address 10B: Phoneline Requirement

Phoneline Requirement (Exhibit B, Sec. 1.d.i.B.)

- Remove requirement (shown in red)

B. Microgrid Operator shall provide within the Microgrid Operator Interconnection Facilities a separate, fenced area with separate access for Company. Microgrid Operator shall provide all conduits, structures and accessories necessary for Company to install a metering package if needed. Microgrid Operator shall also provide within such area, space for Company to install its communications,

SCADA, RTU, and certain relaying if necessary for the Interconnection. Microgrid Operator shall also provide AC and DC source lines as specified later by Company. ~~Microgrid Operator shall provide a telephone line for Company-owned meters.~~ Microgrid Operator shall work with Company to determine an acceptable location and size of the fenced-in area. Microgrid Operator shall provide an acceptable demarcation cabinet on its side of the fence where Microgrid Operator and Company wiring will connect/interface.

Author
For Hawaiian Electric: would a separate telephone line be necessary if the Company installed an advanced meter?

HECO Proposal to address 10B: Soft-Start Ramp Rate

Ramp Rate Clarification

- Commission question in Exhibit E
  - Soft Start RR pertains to how a facility returns to service after being offline
- Revised Exhibit B, Sec. 2.c. Performance Standards (in red) to be consistent with current PPAs and Interconnection Agreements

EXHIBIT E

METHODS AND FORMULAS FOR MEASURING PERFORMANCE STANDARDS, ACCEPTANCE TEST GENERAL CRITERIA, CONTROL SYSTEM ACCEPTANCE TEST CRITERIA

[SCHEDULE I WILL BE REVISED TO REFLECT THE RESULTS OF TECHNICAL REVIEW]

SCHEDULE I TO EXHIBIT E
METHODS AND FORMULAS FOR MEASURING PERFORMANCE STANDARDS

1. Performance Standards as defined below shall be used, in part, to govern actions by Company to limit the actual power output of the Hybrid Microgrid or its Generating Facilities for purposes of maintaining power quality on Company System. Specific standards are defined for:

   - Ramp Rate (RR)

2. Formulas for measuring the performance standards are presented below, and assume that the power

Author
Is this intended to be the same requirement as the soft start ramp rate in Rule 14H? Can this requirement be clarified and standardized?

c. Ramp Rates.

Microgrid Operator shall ensure that the ramp rate of the Hybrid Microgrid is less than the following limits for all conditions including start up, normal operations, curtailing and uncurtailing, Microgrid Operator adjusting the Hybrid Microgrid's net real power export, changes in the solar resource, and shut down for the following periods as calculated in accordance with Schedule I to this Exhibit E.

- Maximum Ramp Rate Upward of [ ] MW/minute for all periods. [TO BE DETERMINED FOLLOWING Technical Review.]

Maximum Ramp Rate Downward of [ ] MW/minute for all periods other than periods for which such maximum is not operationally possible because of rapid loss of solar resource. ~~The Facility start-up ramp rate shall be ____ MW/min. The Facility shutdown ramp rate shall be ____ MW/min.~~ [Ramp rates will be set equal to (Total Rated Capacity of the Microgrid / 3 MW) x 2 MW/min.]

~~Ramp rates shall be calculated in accordance with Schedule I attached to Exhibit E.~~

10C: Disclosure Checklist Discussion

Hawaiian Electric

Draft Modifications to Rule 24 and other DER Programs

11) Draft Modifications to Rule 24 and other DER Programs

11. Draft Modifications to Rule 24 and Other DER Programs for Customer and Hybrid Microgrids

At the Technical Conference, the Company reaffirmed its intent to include the Draft Modifications to Rule 24 in all other applicable DER programs. The Company should identify all such other applicable DER programs ("Other Rules") which are expected to contain redlined language. Further, if there are any additional modifications that need to be made to Rule 24 and the Other Rules (whether broadly applicable or applicable to only a subset of the Rules), the Commission directs the Parties to provide such additional modifications for both Customer and Hybrid Microgrids for review. The Commission requests that the Parties provide redlined versions of the DER tariffs for the Commission's review incorporating the modifications, along with any necessary justifications or comments.

Proposed Action

- Hawaiian Electric will review Commission's redlines, and add them to each existing DER Tariff for WG review.

11) Draft Modifications to Rule 24 and other DER Programs

- WG to confirm no changes
- HECO ok with Commission's edits
  - Red: HECO Draft
  - Dark Red: Commission's edits
- Next step to copy/paste to various Tariffs

F. MICROGRIDS

1. Capitalized terms used in this section are as defined in Rule No. XX, Microgrid Services Tariff.

2. During Grid-Connected Mode, the Microgrid will be operated in parallel with the Company's System.

3. A Customer may operate ~~their~~ its Generating Facility as a Customer Microgrid ~~and~~ or be a ~~P~~participant in a Hybrid Microgrid.

4. A Customer who intends to operate ~~their~~ its Generating Facility ~~as~~ within a Customer Microgrid, or as a ~~P~~participant in a Hybrid Microgrid, shall notify the Company in ~~their~~ its application through the Customer Interconnection Tool.

5. A Customer who operates ~~their~~ its Generating Facility as a Microgrid after ~~obtaing~~ obtaining ~~intereconnnection~~ interconnection approval from the Company shall update ~~their~~ its application through the Customer Interconnection Tool. Such ~~notifcation~~ notification and revision shall satisfy the Customer's notice requirements set forth in Tariff Rule 3B (Change in Customer's Equipment ~~O~~or Operations)

6. Customer Microgrids and Hybrid Microgrid Participants shall comply with the requirements of Rule No.XX, Microgrid Services Tariff, including Section H, Microgrid Operation.

Hawaiian Electric

Next Steps

Action Item List

#	Title	Owner	Action	Target	Status
1	Customer MG Interconnection Agreement	n/a	None	n/a	n/a
2	Definition of Customer	ALL	WG Discuss	1/5	Open
3	Applicability of other Tariffs (i.e., Rule 15)	MRC	Present to WG	1/5	Open
4	Indemnification	HECO	Review and propose changes	1/5	Open
5	Data set for feasibility analysis	HECO	Develop list	1/11	
6	Hybrid MG Compensation	MRC/Ulupono	Present to WG and provide redlines for discussion	1/11	
7	Hybrid MG App Interconnection Queue	n/a	None	n/a	n/a
8	Project/Program Caps, Rated Power	HECO	Review and provide redlines	1/18	
9	Anti-Islanding Provisions	HECO	Review and provide redlines	1/5	Closed
10a	Hybrid MGO Interconnection Agmt	ALL	Review MRC Comments – IA Walk-through	1/14	
10b		HECO	Clarify phoneline and soft-start ramp rate	1/11	
10c		CA	Present position regarding checklist	1/11	
11	Draft Mod to Rule 24 and other DER pgms	HECO	Provide draft of all Tariffs w/ revisions	1/11	

Other items not identified in Items 1-11?

- Discuss PUC Redlines
  - Removal of “emergency events” from MG definition
- What action items should be placed (back to) the “parking lot”?

Proposed Timeline

TUE Jan. 5 (11am 1pm)

- Customer Definition (discussion)
- Applicability of other Tariffs (MRC presentation)
- Indemnification (HECO redlines)
- Anti-Islanding (HECO redlines)
- Hybrid Interconnection Agmt (Discuss plan to resolve)

MON Jan. 11 (11am 1pm)

- Dataset for feasibility analysis
- Hybrid MG Compensation (MRC/Ulupono presentation)
- Hybrid MG Interconnection Agreement (~~MRC/Ulupono redlines & presentation,~~ CA presentation – Disclosure Checklist)
- Draft mod to all DER tariffs (HECO redlines)

THURS Jan. 14 (11am 1pm)

- Project/Program Caps, Rated Power (HECO redlines)
- Hybrid MG Interconnection Agreement (Line by Line Review)
- Other unresolved items

WED Jan. 20 (11am 1pm)

- Unresolved items
- Hybrid MG Interconnection Agreement (Line by Line Review) – Continuation

MON Jan. 25

- Working Group filing due

Mahalo for your time.

https://www.hawaiianelectric.com/about-us/our-vision-and-commitment/resilience/microgrid-services-tariff

Meeting Name	Date of Meeting
Microgrid Services Tariff Working Group Meeting	January 11, 2021

Agenda

Introduction and Action Item List (Slides 1-3)	• WG Lead reviewed progress on past action items.
	  o Action Items 2-4 (discussed Jan. 5) are still "open". WG Lead (K. Aramaki) working with MRC directly to work towards resolution. Proposed changes to be sent to WG if agreement made or input needed.
	  o Action Item 9 (anti-islanding provision) considered "closed".
	  o Action Item 10a updated to reflect plan to do a walk-through of MRC's (and others) walk-through of the Interconnection Agreement.
	• Focus of Jan. 11 meeting was to discuss highlighted action items 5, 6, 10b, 10c, and 11.

Data set for feasibility analysis (Slides 4-6)	• Commission requested a checklist to standardize data requirements for a feasibility study.
	• HECO clarified the Interconnection Agreement, Exhibit A included most of the information needed to commence the feasibility study, but proposed a few additional requirements:
	  o Map showing defined electrical boundaries
	  o Identification of nearest protective devices on the customer side
	  o (if available) the generator's reactive capability curve
	• **Action Item: Commission to provide feedback on proposed changes**

MRC & Ulupono proposed Hybrid MG Compensation (Slides 7-13)	• MRC (B. Baird) and Ulupono's (G. Sumida) understood prior to the Commission's letter (dtd. 12/20/20) was that alternative compensation concepts (i.e., leasing) was off the table. Alternative proposals were being presented to meet the letter's request by the Commission.
	  o MRC/Ulupono did not object to "Draft Tariff Model" but offering other alternative compensation models to include in the tariff and to identify and delineate differences between the models.
	• MRC stated the "Draft Tariff Model" (currently included in draft tariff) did not leave much incentive for anyone to develop a hybrid MG.
	• MRC and Ulupono presented two alternatives, "Community Solar Model" and "Customer Microgrid Model".
	  o Community Solar Model
	  ▪ Model is based on Community Solar, and similar to "Draft Tariff Model"
	  ▪ Energy generated by resources within the MG are compensated at the amount set by the MGO, and is equal to the amount

	participants pay for this energy. Energy "imported" by the utility into the MG will be compensated at retail rates. o Customer MG Model ▪ Ulupono suggested the Customer MG Model may not need a standard interconnection agreement included in the tariff, as the projects and terms would be negotiated between developer (MGO) and the Company (HECO). • MRC and Ulupono explained that Hybrid MG developers would not be signing up many (i.e., 100) residential homes, but most likely will develop a MG with few large commercial participants. Using this context, MRC/Ulupono suggested: o Opt in/opt out issues (as raised by a WG member) would not be an issue for the Hybrid MG. The issues raised were 1) free rider participants, 2) isolation of customers opting out, 3) availability of energy during islanding with free rider participants. o CA look into developing two types of disclosure checklists, one (more comprehensive set) for residential participants and another (less prescriptive set) for commercial customers. • MRC and Ulupono acknowledge there are more things to work out with the WG in the two compensation proposals. • CA asked the following: o Hybrid MG quality of service. How are participants protected and the level of service quality? For the Utility, service quality levels are included in the tariff. o o If a hybrid MGO wants to be considered a utility. MRC and Ulupono confirmed hybrid MGOs do not intend to become public utilities. ▪ The MG Tariff does not change what is written in Hawaii Law and Statute. ▪ Additional thought and discussion should be considered on this question if proposed compensation concepts are to be considered. o Items identified above, in addition to items regarding the compensation, (e.g., customer disclosure, information to customer regarding service quality should be addressed with the two compensation proposals. • HECO provided the following feedback for the Commission's consideration: o The proposed changes were not fully discussed, vetted, and thought through by the WG members. The two new hybrid microgrid models raise a number of issues that merit further detailed discussion and possible changes that are likely not feasible at this point in the proceeding. Inclusion of these two new hybrid models in this current

	phase of the tariff proceeding may have unintended consequences. Propose to examine further in a future phase of this proceeding. o Compensation within the two proposed concepts should be considered with other proceedings (i.e., DER tariff), as the proposal is for the MGO to set the price for compensation. Note that the draft tariff allows for inclusion of fossil-fuel generation in the MG (intended for resilience purposes). o Concepts that include a joint venture with the Utility (or Utility-led MGs) were considered out of scope by the Working Group. o The proposed compensation models can already be accomplished without a tariff as they are likely to be done by sophisticated parties, with unique projects that would have independent negotiations on a number of points, subject to Commission approval. o Concepts appear counter to the goals of streamlining and simplifying the tariff. • **Action Item: Commission to provide further guidance.**
Hybrid MGO Interconnection Agreement (Slides 14-18)	• HECO provided its proposals to address action item 10B. o Proposal was to remove phone line requirement in Exhibit B, Sec. 1.d.i.B.) ▪ No objections by the WG. o HECO provided a revision to Exhibit B, Sec. 2.c., which included language to clarify Ramp Rate requirements. ▪ **Action Item: Commission to provide feedback.** • Action Item 10c: o **Action Item: CA working on Disclosure Checklist Revision. Will be sent to WG for review.** ▪ CA requested Commission guidance on Hybrid MG compensation to consider in revision of checklist. o HECO and CA reiterated support of a disclosure checklist. o WG members were asked, and did not provide any opposition to having a disclosure checklist. Some thoughts offered from WG members are to develop different disclosure checklists for different customers (e.g., commercial, residential customers, recognizing that there may be a difference with small commercial customers).
Draft Modifications to Rule 24 and other DER Programs (Slides 19-21)	• MRC requested the following changes to the Commission's redlines: o Section F.3 (add **bold** text): ▪ "…Generating Facility as **part of** a Customer Microgrid or…" o Section F.5 (add **bold** text): ▪ "…Generating Facility as **part of** a Microgrid after…"

	• **Action Item: WG Lead (K. Aramaki) to include revisions and send draft of all DER tariffs with Commission's redlines for WG review.**
Next Steps (Slide 22-25)	• Meetings scheduled Jan. 14 and 20 • WG Lead (K. Aramaki) will send draft Hybrid MGO Interconnection Agreement to WG in preparation for the walk-through on Jan. 14.

Working Group Parking Lot (Added for reference)	• Change of ownership of Microgrid
	• Standby Charges or Exit Fees
	• Customer protection-related considerations
	• Microgrid/IGP procurement considerations
	• Considerations of gaming between utility-owned and 3rd-party MGs
	• Army/Military MG issues such as WG will consider nested microgrids, if appropriate
	• Interactions with other dockets
	  o DER Tariff/Programs
	  o IGP Resiliency
	• Consideration of societal, environmental value
	• Development of PPA model for hybrid MGs
	• Other types of microgrids that don't fit Act 200 definition
	• Gap in tariff for customers greater than 100kW participation & compensation in non-normal, non-island scenarios. Eg, SIA
	• Harmonize compensation with other grid service mechanisms
	  o Expanded functionality from MG service and whether should be included in MST.
	• Contractual obligations for other grid services – Customers with existing DER/DR obligations still need to meet performance if included in a MG.
	• Customer approvals – Does a Hybrid MG need a full customer subscription?
	• Resiliency Tariff
	• Retail wheeling (see January 16, 2020 Commission Guidance Letter)
	• Compensation While Grid Connected (see January 16, 2020 Commission Guidance Letter)

Working Group Chairs:		
Marcey Chang, DCCA	Chair, Market Facilitation and Interconnection WG	mchang@dcca.hawaii.gov
Marc Asano, HE	Chair, Interconnection WG	marc.asano@hawaiianelectric.com
Ken Aramaki, HE	Chair, Market Facilitation WG	ken.aramaki@hawaiianelectric.com

Attendees:		
Anand Samtani, Hawaii PUC	Brittany Blair, Newport Consulting	Gerald Sumida, Carlsmith Ball

Andrew Nojiri, HE	Craig Nakanishi, Cades Schutte	Gina Yi, Hawaii PUC
Andrew Okabe, Hawaii PUC	Darene Matsuoka, Cades Schutte	Paul De Martini, Newport Consulting
Ashley Agcaoili, Hawaii PUC	Earlynne Maile, HE	Tracie Black, HE
Baird Brown, eco(n)law LLC	Eric Kunisaki, HE	

Hawaiian Electric

Microgrid Services Tariff Working Group

January 14, 2021

Agenda

- Revisit Action Item List
- Today's Focus
  - Applicability of other Tariffs (i.e., Rule 15)
  - Project/Program Caps, Rated Power
  - Hybrid MGO IA Walk-Through
- Next Steps

Action Item List

#	Title	Owner	Action	Target	Status
1	Customer MG Interconnection Agreement	n/a	None	n/a	n/a
2	Definition of Customer	ALL	WG Discuss	1/5	Open
3	Applicability of other Tariffs (i.e., Rule 15)	MRC	Present to WG	1/5	Open
4	Indemnification	HECO	Review and propose changes	1/5	Open
5	Data set for feasibility analysis	HECO	Develop list	1/11	Open
6	Hybrid MG Compensation	MRC/Ulupono	Present to WG and provide redlines for discussion	1/11	Open
7	Hybrid MG App Interconnection Queue	n/a	None	n/a	n/a
8	Project/Program Caps, Rated Power	HECO	Review and provide redlines	1/14	
9	Anti-Islanding Provisions	HECO	Review and provide redlines	1/5	Closed
10a	Hybrid MGO Interconnection Agmt	ALL	Review MRC Comments – IA Walk-through	1/14	
10b		HECO	Clarify phoneline and soft-start ramp rate	1/11	Open
10c		CA	Present position regarding checklist	1/11	Open

Hawaiian Electric

Applicability of other Tariffs

Tariff Section 3 Revised Proposal (Jan. 5)

3. For Customer Microgrids and Hybrid Microgrids, existing tariffs and programs shall also be applicable subject to the following:

a. Notwithstanding Rule 15, A Microgrid Operator may resell electric energy received from the Company to (i) other persons within the electrical boundaries of the microgrid who have contracted to receive regular service from the microgrid and (ii) the Company; and

b. Any Company Rule or program which requires that Generating Facilities be owned or leased by a Customer or located on Customer premises to be eligible shall be deemed to include all Generating Facilities that are (i) behind the Point of Common Coupling of a Customer Microgrid and under the operating control of the Microgrid Operator and (ii) otherwise comply with the requirements of the rule or program.

HECO Proposal and Discussion

Par. 3 and 4a acceptable to MRC

Need further discussion

3. For Hybrid Microgrids, existing tariffs and programs shall also be applicable.

4. For Customer Microgrids, existing tariffs and programs shall also be applicable, subject to the following:

   a. A Microgrid Operator of a Customer Microgrid may allocate costs without markup for electric service received from the Company to other persons within the electrical boundaries of the microgrid who have contracted to receive regular service from the microgrid; and

   b. Any Company Rule or program which requires that Generating Facilities be owned or leased by a Customer or located on Customer premises to be eligible shall be deemed to include all Generating Facilities that are

      (i) behind the Point of Common Coupling of a Customer Microgrid and under the operating control of the Microgrid Operator and (ii) otherwise comply with the requirements of the rule or program.

Hawaiian Electric

Project/Program Caps, Rated Power

Total Rated Capacity

Hybrid MGO IA, Exhibit G (Definitions)

- Suggested language by WG to remain flexible for storage output?

49. "Total Rated Capacity" means the aggregate total of all Generating Facilities that intend to supply power to the Hybrid Microgrid during Island Mode as defined in Section 7 of Exhibit A to this Interconnection Agreement.

Alternative from Rule 14H

Technical System Size: Technical System Size as used herein applies to photovoltaic inverter-based generation, including those paired with energy storage systems. Technical System Size for all other types of Generating Facilities will be handled on a case-by-case basis. Technical System Size refers to the maximum possible simultaneous generation (including discharge of energy storage systems) of the Generating Facility, and is calculated as the lesser of the sum of all inverter strings of the aggregate system or the maximum amount of export as permitted by the existence of an on-site limiting element that caps the amount of the Generating Facility's export at the Point of Common Coupling ("PCC"). Each inverter string is calculated as the sum of all simultaneous kWdc per inverter string or the inverter kWac per inverter string, whichever is less. Technical System Size is used as part of the technical review process as described herein.

Hawaiian Electric

Hybrid MGO IA Walk-Through

Discussion with Word Doc

Hawaiian Electric

Next Steps

Action Item List

#	Title	Owner	Action	Target	Status
1	Customer MG Interconnection Agreement	n/a	None	n/a	n/a
2	Definition of Customer	ALL	WG Discuss	1/5	Open
3	Applicability of other Tariffs (i.e., Rule 15)	MRC	Present to WG	1/5	Open
4	Indemnification	HECO	Review and propose changes	1/5	Open
5	Data set for feasibility analysis	HECO	Develop list	1/11	Open
6	Hybrid MG Compensation	MRC/Ulupono	Present to WG and provide redlines for discussion	1/11	Open
7	Hybrid MG App Interconnection Queue	n/a	None	n/a	n/a
8	Project/Program Caps, Rated Power	HECO	Review and provide redlines	1/14	
9	Anti-Islanding Provisions	HECO	Review and provide redlines	1/5	Closed
10a	Hybrid MGO Interconnection Agmt	ALL	Review MRC Comments – IA Walk-through	1/14	
10b		HECO	Clarify phoneline and soft-start ramp rate	1/11	Open
10c		CA	Present position regarding checklist	1/11	Open
11	Draft Mod to Rule 24 and other DER pgms	HECO	Provide draft of all Tariffs w/ revisions	1/11	Open

Other items not identified in Items 1-11?

- Discuss PUC Redlines
  - Removal of “emergency events” from MG definition
- What action items should be placed (back to) the “parking lot”?

Proposed Timeline

TUE Jan. 5 (11am 1pm)

- Customer Definition (discussion)
- Applicability of other Tariffs (MRC presentation)
- Indemnification (HECO redlines)
- Anti-Islanding (HECO redlines)
- Hybrid Interconnection Agmt (Discuss plan to resolve)

MON Jan. 11 (11am 1pm)

- Dataset for feasibility analysis
- Hybrid MG Compensation (MRC/Ulupono presentation)
- Hybrid MG Interconnection Agreement (~~MRC/Ulupono redlines & presentation,~~ CA presentation – Disclosure Checklist)
- Draft mod to all DER tariffs (HECO redlines)

THURS Jan. 14 (11am 1pm)

- Project/Program Caps, Rated Power (HECO redlines)
- Hybrid MG Interconnection Agreement (Line by Line Review)
- Other unresolved items

WED Jan. 20 (11am 1pm)

- Unresolved items
- Hybrid MG Interconnection Agreement (Line by Line Review) – Continuation

MON Jan. 25

- Working Group filing due

Mahalo for your time.

https://www.hawaiianelectric.com/about-us/our-vision-and-commitment/resilience/microgrid-services-tariff

Meeting Name	Date of Meeting
Microgrid Services Tariff Working Group Meeting	January 14, 2021

Agenda

Introduction and Action Item List (Slides 1-3)	• Commission staff provided updates, feedback, and guidance on certain action items (below). Commission staff clarified that guidance provided in this meeting is from Commission staff and not the Commissioners' so the guidance is subject to change. • Review of progress on Action Item (AI) List: o AI #2 (Definition of Customer): WG lead (K. Aramaki) gave an update that an agreement has been worked out between HECO and MRC, and will be provided to the WG for review. o AI #4 (Indemnification): WG lead gave an update that an agreement has been worked out between HECO and MRC, and partially included in the Hybrid MG IA document (provided for the walk-through). ▪ Commission staff requested the WG look at streamlining the Tariff language. For example, if the language is verbatim between the Tariff and Hybrid MGO IA, consider referencing the IA. Attorney representing HECO mentioned that the Company will take a look at this Tariff section again but noted that since the Hybrid MGO IA is between the Company and the Microgrid Operator as opposed to the Tariff which applies to everyone, careful thought needs to be given to taking sections out of the tariff. o AI #5 (Data Feasibility): Commission staff mentioned the data request was acceptable. Encouraged the WG to reference the Hybrid MG IA. o AI #6 (Hybrid MG Compensation): Commission staff acknowledged the limited time remaining to address the alternative compensation approaches but encouraged the WG to address and prioritize as much as possible – keeping in mind the possibility of a future phase. The Commission deferred to the WG to determine priority of items to address and provide as much as the WG can provide within the timeframe. ▪ HECO suggested the proposals, specifically the second proposed model ("Customer MG Model") did not seem to meet the intent of a programmatic Tariff (e.g., "plug and play"). ▪ WG (HECO, MRC and Ulupono) agreed the second proposed model from 1/11/21 ("Customer MG Model") would be more difficult to address than the first alternative model ("Community Solar Model").

	▪ Ulupono suggested adding a footnote in the definitions to acknowledge two models exist as a path to move forward with the current version of the tariff. o AI #10b (Hybrid MGO IA soft-start ramp rate): Commission staff mentioned the revised language was acceptable. o AI #10c (Hybrid MGO Disclosure Checklist): CA continues to work on draft revision of checklist. ▪ The Commission staff did not have specific suggestions, but encouraged the CA to look for ways to streamline the checklist. o AI #11 (Modifications to DER Tariffs): WG Lead (K. Aramaki) to provide to WG for review.
Applicability of other Tariffs (Slides 4-6)	• Slide 6: HECO, Ulupono, MRC are in agreement with paragraphs 3 and 4.a. HECO requested additional context for MRC's 4.b proposal. • MRC explained 4.b was to address the language in the first few paragraphs of existing DER Tariffs, requiring the customer to own or lease and operate a generating facility. MRC explained language in 4.b was to address the possibility of a MGO being separate from the owner of the generating facility(s). • HECO requested additional information, as it appeared the scenarios being discussed were possible and exemptions to DER Tariffs were not required. • **Action Item: MRC to provide a write-up including specific scenarios that are unworkable by the current DER Tariff language.** • A discussion on Rule 15, Section A was brought up. MRC originally had a concern that Rule 15, Section A created a barrier for customer MG development. Upon further discussion and clarification of the definition of "separate premise" in Rule 1, MRC withdrew its concerns.
Project/Program Caps, Rated Power (Slides 7-8)	• HECO proposed using "Technical System Size" as a definition to calculate "Total Rated Capacity". o WG was generally in agreement with the proposed definition, but requested HECO clarify whether the output of the system is the aggregate of all systems within the MG or the export capability at the PCC. **Action Item: HECO will review.** • Project/Program Caps was discussed during the Hybrid MGO IA Walk-Through. o HECO provided its position that the intent of the 3MW project cap was to align with the assumption the Tariff is a programmatic, "plug and play" application, where the developer/MGO is clear on their requirements (with a detailed IA), also feeder capacity is generally limited to 3MW and anything greater will require an expanded study scope and most likely additional requirements.

	o The WG agreed that project larger than 3MW may require a PPA-type arrangement and not have a standard IA. Proposal was to include a footnote in the Tariff for process for larger projects, as the WG agreed larger projects would require a PPA-type arrangement.
Hybrid MGO Interconnection Agreement (Slide 9, Consolidated Word Doc)	• WG commenced with a walk-through of the Hybrid MGO IA discussing the Commission's redlines, MRC's comments, and HECO's initial comments. o WG discussions were included in a revised version of the Hybrid MGO IA. o WG completed 4 pages of 52 for review. o **Action Item: WG to review, revise, comment as needed via email to address prior to the next scheduled WG meeting.**
Next Steps (Slides 10-13)	• Next (and last) WG meeting scheduled Jan. 20. MRC requested to start the meeting at 12:00pm. • Agenda for meeting includes: o Hybrid MGO IA Walk-through o Microgrid Services Tariff Walk-through o Hybrid MG Compensation • WG agreed the priority should be placed on the Tariff and Hybrid MGO IA, then addressing Hybrid MG Compensation items.
Working Group Parking Lot (Added for reference)	• Change of ownership of Microgrid • Standby Charges or Exit Fees • Customer protection-related considerations • Microgrid/IGP procurement considerations • Considerations of gaming between utility-owned and 3rd-party MGs • Army/Military MG issues such as WG will consider nested microgrids, if appropriate • Interactions with other dockets o DER Tariff/Programs o IGP Resiliency • Consideration of societal, environmental value • Development of PPA model for hybrid MGs • Other types of microgrids that don't fit Act 200 definition • Gap in tariff for customers greater than 100kW participation & compensation in non-normal, non-island scenarios. Eg, SIA • Harmonize compensation with other grid service mechanisms o Expanded functionality from MG service and whether should be included in MST. • Contractual obligations for other grid services – Customers with existing DER/DR obligations still need to meet performance if included in a MG. • Customer approvals – Does a Hybrid MG need a full customer subscription?

	• Resiliency Tariff • Retail wheeling (see January 16, 2020 Commission Guidance Letter) • Compensation While Grid Connected (see January 16, 2020 Commission Guidance Letter)

Working Group Chairs:		
Marcey Chang, DCCA	Chair, Market Facilitation and Interconnection WG	mchang@dcca.hawaii.gov
Marc Asano, HE	Chair, Interconnection WG	marc.asano@hawaiianelectric.com
Ken Aramaki, HE	Chair, Market Facilitation WG	ken.aramaki@hawaiianelectric.com

Attendees:		
Anand Samtani, Hawaii PUC	Brittany Blair, Newport Consulting	Gerald Sumida, Carlsmith Ball
Andrew Nojiri, HE	Craig Nakanishi, Cades Schutte	Gina Yi, Hawaii PUC
Andrew Okabe, Hawaii PUC	Darene Matsuoka, Cades Schutte	Layla Kilolu, Hawaii PUC
Ashley Agcaoili, Hawaii PUC	Earlynne Maile, HE	Paul De Martini, Newport Consulting
Baird Brown, eco(n)law LLC	Eric Kunisaki, HE	Tracie Black, HE

Hawaiian Electric

Microgrid Services Tariff Working Group

January 20, 2021

Agenda

- Jan. 25 Filing and Next Steps
- Hybrid MG Interconnection Agreement Walk-Through
- Microgrid Services Tariff
  - Hybrid Compensation
  - Applicability of other Tariff Rules
- Next Steps

Action Item List (Highlighted to be discussed)

#	Title	Owner	Action	Status	Comments
1	Customer MG Interconnection Agreement	n/a	None	n/a	n/a
2	Definition of Customer	ALL	WG Discuss	Open	For Review (Tariff)
3	Applicability of other Tariffs (i.e., Rule 15)	MRC	Present to WG	Open	
4	Indemnification	HECO	Review and propose changes	Open	For Review (Tariff/IA)
5	Data set for feasibility analysis	HECO	Develop list	Open	Closed
6	Hybrid MG Compensation	MRC/Ulupono	Present to WG and provide redlines for discussion	Open	MRC Redlines Rcvd 1/18/21
7	Hybrid MG App Interconnection Queue	n/a	None	n/a	
8	Project/Program Caps, Rated Power	HECO	Review and provide redlines	Open	Comments in Redline
9	Anti-Islanding Provisions	HECO	Review and provide redlines	Closed	
10a	Hybrid MGO Interconnection Agmt	ALL	Review MRC Comments – IA Walk-through	Open	
10b		HECO	Clarify phoneline and soft-start ramp rate	Closed	For Review (IA)
10c		CA	Present position regarding checklist	Open	
11	Draft Mod to Rule 24 and other DER pgms	HECO	Provide draft of all Tariffs w/ revisions	Open	For Review (except Hawaii Is. Rule 14H)

Hawaiian Electric

Jan. 25 Filing and Next Steps

Discussion

Hawaiian Electric

Hybrid MGO IA Walk-Through

Discussion with Word Doc

Hawaiian Electric

Hybrid Microgrids

Opening Discussion

Hybrid Microgrids

- The objective of microgrids in Hawaii is to address identified resilience needs by enabling all customers' greater options
- The majority of Hybrid MG development in the US to-date has been pursued by communities – not large Commercial & Industrial customers
- Concerned that the discussion is ignoring community interests and a large group of typically underserved customers

- Resilience WG identified a multi-tier set of priority customers
  - The majority of Tier 1 customers are governmental organizations motivated by resilience and access to federal (e.g., DoD DCEI Program) and state government funding for MG project development (e.g., Schofield)
  - Examples of State/Local efforts at Hybrid Microgrids
    - NY Prize Program
    - California Community Microgrid Enablement Programs (CPUC Track 2)
    - Individual cities/communities, such as city of Bridgeport, CT & Ann Arbor, MI

Exhibit 2: RWG Recommended Customer Classifications by Tier

Tier 1	Tier 2	Tier 3
• Military • Telecommunications • Hospitals and critical healthcare • Water and wastewater • Emergency management and first responders	• Transportation • Hospitality • Banking and finance	• Remaining customers

Hybrid Microgrids

- Discussion of Hybrid Compensation Models is insufficient in its scope and has centered exclusively on a small set of private developers' interests
  - Hawaii currently has a greater range of DER opportunities to realize its value potential through tariffs, programs and procurements than any other state
  - There is also another ongoing proceeding discussing opportunities to maximize the value of DER

- NARUC-NASEO Report on MG Funding
  - "States with successful microgrid programs have used various sources of public capital to ensure the timely development of microgrids"
    - Bridgeport MG - Connecticut Department of Energy and Environmental Protection, the State Energy Office, provided a $2.975 million grant toward the microgrid's capital costs, with the City of Bridgeport covering the remaining $5.3 million (NARUC-NASEO Report)

  - Coordinated funding from multiple state programs could be needed
    - ✓ Developing new rate structures that microgrids can use to develop predictable revenue streams (Already exist in HI as described by report)
    - Enabling public-private capital financing options as a first step to provide more alternatives for microgrids to source capital
    - Providing public funding at key points in the microgrid financing process to reduce private investment risk in microgrid development.
    - Providing comprehensive technical assistance and support for customers considering various funding and financing options.
    - ✓ Ensuring that regulatory certainty for microgrids is present to support investor plans (MGS Tariff addresses this issue by affirming customer and hybrid MG development opportunities)
    - Empowering underserved communities to finance microgrids to meet their needs
      - California has authorized $30mm toward community hybrid microgrids and proposed another $70+ mm in a current proposed decision with a focus on "vulnerable communities"

Hawaiian Electric

Hybrid MG Compensation

MRC's Proposed Edits (1/18/21)

MRC's Proposed Edits (1/18/21)

- New definitions added
- Revision to Sec. E.2. Company Supplied Hybrid MG

~~e.~~f. Company Supplied Hybrid Microgrid means a Hybrid Microgrid in which all electric energy supplied to Microgrid Participants is supplied by the Company.

~~y.~~bb. Operator Supplied Hybrid Microgrid means a Hybrid Microgrid in which all or a portion of the electric energy supplied to the Microgrid Participants is supplied by the Microgrid Operator to the Company for the benefit of the Microgrid Participants and compensated and billed as provided in Section E.3. of this Tariff.

2. ~~Compensation for~~ Company Supplied Hybrid Microgrid~~s Operator and Microgrid Participants~~.
~~2.~~

a. ~~For a~~For ~~Hybrid~~the Microgrid Operator and all Microgrid Participants in a Company Supplied Hybrid Microgrid, all applicable energy credit rates and compensation will apply during Grid-Connected Mode and Island Mode. While operating in Island Mode, all existing applicable Customer tariffs and programs shall remain in effect and all energy delivered and sold within the Microgrid during the period will be deemed transacted with the Company pursuant to the tariffs.

b. Any Generating Facility with an appropriate Customer Interconnection Agreement executed with the Company and supplying energy to a Hybrid Microgrid during Island Mode, and without an existing means for compensation by the utility (e.g., PPA, tariff), shall be compensated by Energy Credit Rates as defined and outlined in Rule No. 24.

c. Customers within a Hybrid Microgrid shall be billed monthly for the energy supplied by the Company, in accordance with Rule No. 8, the applicable rate schedule, and Company's rules filed with the Commission.

MRC's Proposed Edits (1/18/21)

- Revision to Sec. E.2. Company Supplied Hybrid MG

3. Operator Supplied Hybrid Microgrids.

a. For the Microgrid Operator and all Microgrid Participants in an Operator Supplied Hybrid Microgrid, all applicable energy credit rates and compensation will apply during Grid-Connected Mode and Island Mode except that electric energy will be supplied to and paid for by the Company and billed to Microgrid Participants as specifically provided in Section E.3.c.

b. Any Generating Facility with an appropriate Customer Interconnection Agreement executed with the Company and supplying energy to a Hybrid Microgrid during Island Mode, and without an existing means for compensation by the utility (e.g., PPA, tariff) or the Microgrid Operator, shall be compensated by Energy Credit Rates as defined and outlined in Rule No. 24.

c. For an Operator Supplied Hybrid Microgrid, Microgrid Participants shall be billed monthly by the Company for (i) the portion of the energy supplied to the Microgrid Participant by the Company, in accordance with Rule No. 8, the applicable rate schedule, and Company's rules filed with the Commission, and (ii) the portion of the energy supplied to the Microgrid Participant by the Microgrid Operator, in accordance with the agreement executed by the Microgrid Operator and the Microgrid Participant. The Company thereafter shall pay the Microgrid Operator for the portion of the energy supplied by the Microgrid Operator at the rate charged by the Microgrid Operator to the Customers.

4. Alternative Hybrid Microgrids. The developer of a proposed Hybrid Microgrid may make a proposal for other compensation or joint operating arrangements to the Company, which would, if acceptable to the Company, be incorporated in a separate agreement with the Company that is subject to Commission approval.

~~a.~~

~~3.~~5. Resilience. Compensation for resilience grid services may be compensable under an appropriate resiliency tariff, rate, or rider.

Company's Initial Questions

- Definition – Company Supplied Hybrid MG
- Sec. 3.b. duplicated from 2.b. Sec. 2.b was originally intended to provide compensation for generating units providing resilience during island mode (emergencies) only.
- Sec. 3.c. Clarification – Is this a pass-through of an agreed cost between MGO and Participant?
  - Need to work out administrative details/cost.
  - Need to work out wires cost/charge.
  - What happens with non-payment by customer for energy? Company (and ratepayers) are in the middle of these pass-through transactions.
  - Impact of rates in DER docket?
- Confirm Hybrid MGs allowed to island in emergency situations or at the direction of the Company only. Language suggests otherwise.
- How does this work during grid-connected mode? How do you identify how much energy (and at what time) the participants used the MGO's energy vs. Company energy?
  - Impact of potential TOU rates?
- Does this proposal required the MGO to be a public utility?
- More questions will likely be raised as this is reviewed further…

Hawaiian Electric

Applicability of other Tariffs

Tariff Section 3 Revised Proposal (Jan. 5)

3. For Customer Microgrids and Hybrid Microgrids, existing tariffs and programs shall also be applicable subject to the following:

a. Notwithstanding Rule 15, A Microgrid Operator may resell electric energy received from the Company to (i) other persons within the electrical boundaries of the microgrid who have contracted to receive regular service from the microgrid and (ii) the Company; and

b. Any Company Rule or program which requires that Generating Facilities be owned or leased by a Customer or located on Customer premises to be eligible shall be deemed to include all Generating Facilities that are (i) behind the Point of Common Coupling of a Customer Microgrid and under the operating control of the Microgrid Operator and (ii) otherwise comply with the requirements of the rule or program.

HECO Proposal and Discussion

Par. 3 and 4a acceptable to MRC

Need further discussion

3. For Hybrid Microgrids, existing tariffs and programs shall also be applicable.

4. For Customer Microgrids, existing tariffs and programs shall also be applicable, subject to the following:

   a. A Microgrid Operator of a Customer Microgrid may allocate costs without markup for electric service received from the Company to other persons within the electrical boundaries of the microgrid who have contracted to receive regular service from the microgrid; and

   b. Any Company Rule or program which requires that Generating Facilities be owned or leased by a Customer or located on Customer premises to be eligible shall be deemed to include all Generating Facilities that are

      (i) behind the Point of Common Coupling of a Customer Microgrid and under the operating control of the Microgrid Operator and (ii) otherwise comply with the requirements of the rule or program.

Act 200

- The legislature further finds that without standard terms regarding interconnection and the value of microgrid services, businesses and residents developing microgrids may choose to leave the utility grid altogether, thereby weakening the overall system and increasing costs for other utility customers.
- The tariff as developed neither changes interconnection for customer microgrids nor provides any specific compensation.
- The suggestion is to at least assure that certain existing compensation programs are available to all microgrids.

Rule 22 (and 23, 24, 25, 27)

A. ELIGIBLE CUSTOMER-GENERATOR

Customer Self-Supply service is available to permanent customers ("Eligible Customer-Generator") who own (or lease from a third party) and operate (or contract to operate with a third party) a solar generating facility ("Generating Facility" or "Self-Supply System"), with a capacity of not more than one hundred kilowatts (100 kW), and where:

1. The Generating Facility, which may include an energy storage system, is located on the Eligible Customer-Generator's premises. . . .

Scenario Key

- Two requirements:
  - Own or Lease
  - On Customer-Generator premises
- Parties
  - Microgrid Operator "M"
  - First Consumer "C1"
  - Second Consumer"C2"
- Sale or distribution of power
  - Solid Arrow ⟶
- Generator/Storage
  - Blue Box M Owner shown in center
- Load
  - Yellow Box C1 Owner/Lessor shown in center
- Company Customer M
  - Indicated in Red e.g.
- Premises
  - Owned = solid box C1
    Small box indicates owner
  - Leased = dashed box C2
    Small box indicates lessee
- Equipment lease
  - Dashed arrow - - - - - →

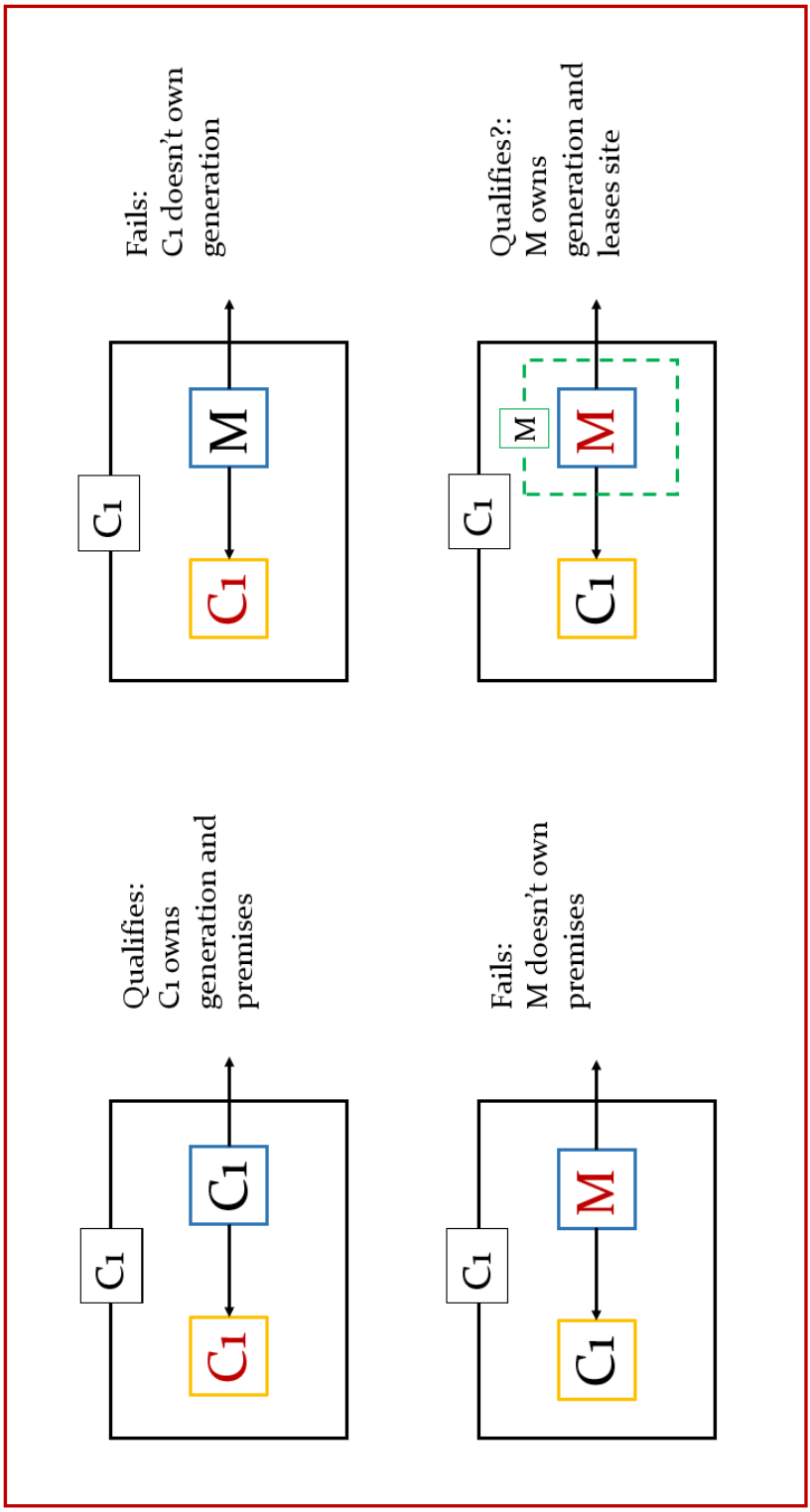
Qualifies:
C1 owns
generation and
premises
C1
C1
C1
Fails:
C1 doesn't own
generation
C1
M
C1
Fails:
M doesn't own
premises
C1
M
C1
Qualifies?:
M owns
generation and
leases site
C1
M
M
C1

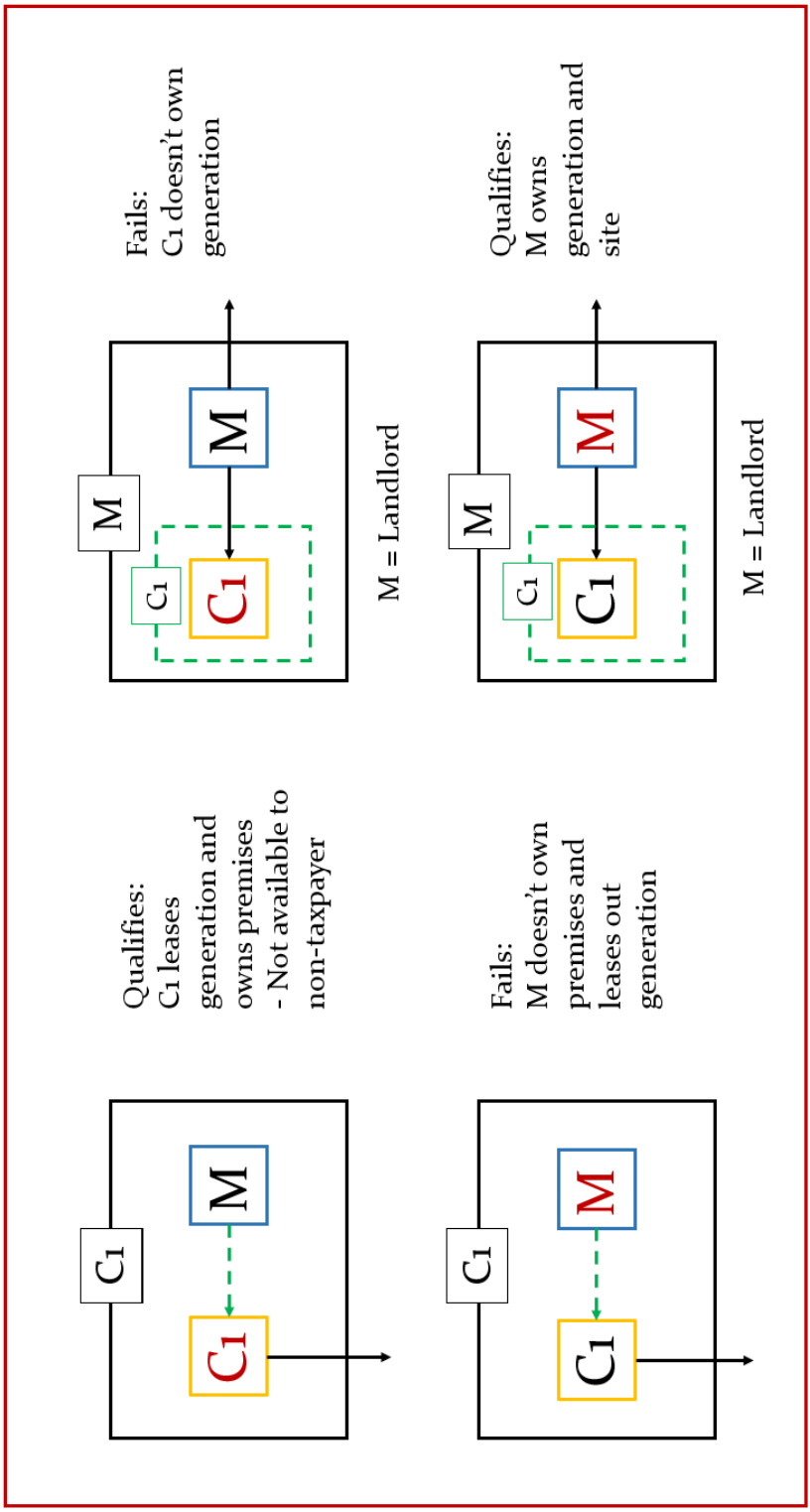
C1
M
C1
Qualifies:
C1 leases generation and owns premises
- Not available to non-taxpayer
M
C1
C1
M
Fails:
C1 doesn't own generation
M = Landlord
C1
M
C1
Fails:
M doesn't own premises and leases out generation
M
C1
C1
M
Qualifies:
M owns generation and site
M = Landlord

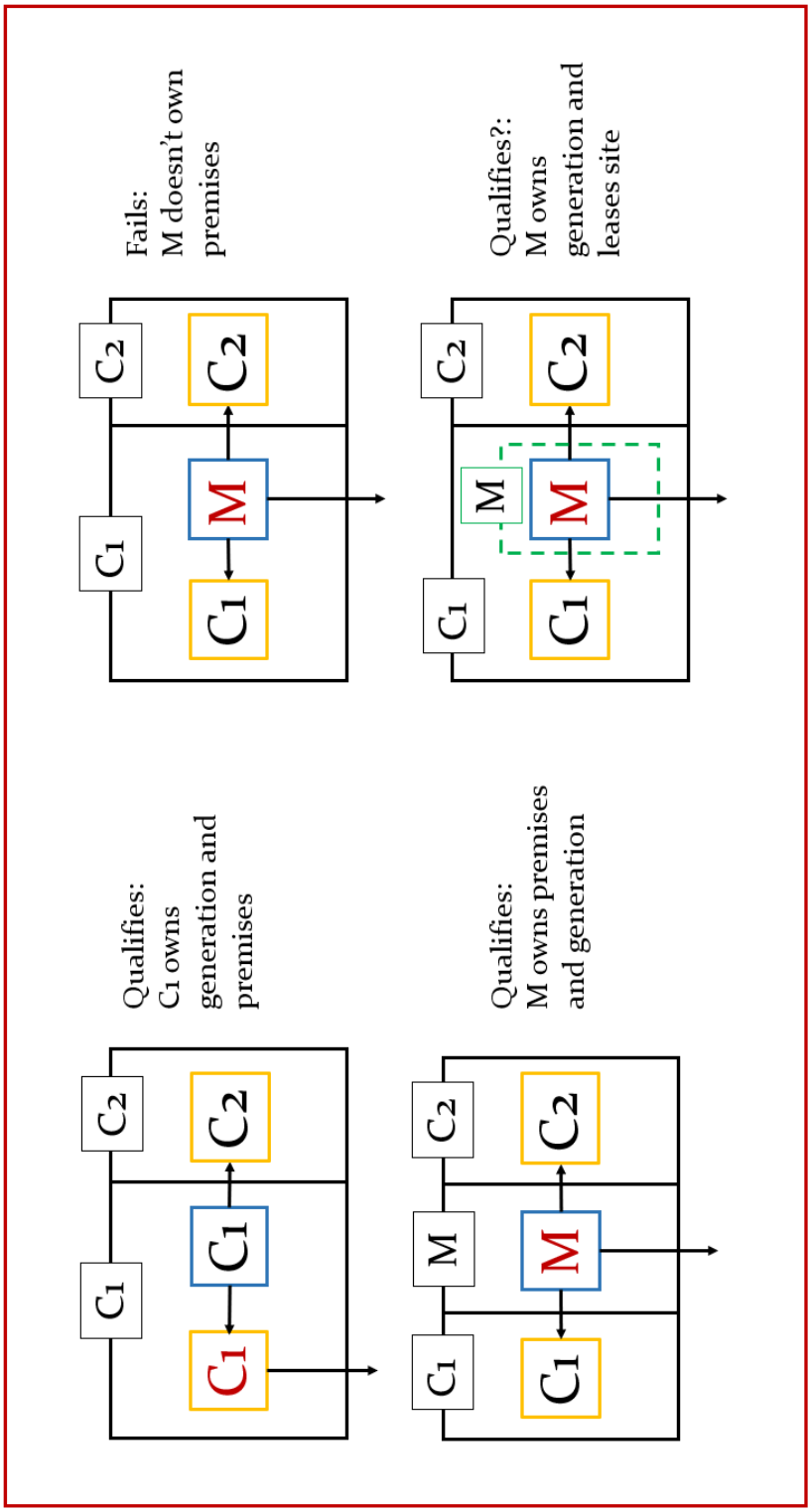
Qualifies:
C1 owns
generation and
premises
C1
C2
C1
C1
C2
Fails:
M doesn't own
premises
C1
C2
C1
M
C2
Qualifies:
M owns premises
and generation
C1
M
C2
C1
M
C2
Qualifies?:
M owns
generation and
leases site
C1
M
C2
C1
M
C2

Conclusions

- Premises is not defined
  - If it includes leaseholds (or easements, which are often used for solar installations) then the “located on premises” requirement is less limiting
- Nevertheless, the results are very idiosyncratic for the same parties with essentially the same structure
- If there are generators on different premises it gets even more complicated than these examples
- Why not simply level the playing field for all microgrids?

Hawaiian Electric

Next Steps

Action Item List

#	Title	Owner	Action	Status	Comments
1	Customer MG Interconnection Agreement	n/a	None	n/a	n/a
2	Definition of Customer	ALL	WG Discuss	Open	For Review (Tariff)
3	Applicability of other Tariffs (i.e., Rule 15)	MRC	Present to WG	Open	
4	Indemnification	HECO	Review and propose changes	Open	For Review (Tariff/IA)
5	Data set for feasibility analysis	HECO	Develop list	Open	Closed
6	Hybrid MG Compensation	MRC/Ulupono	Present to WG and provide redlines for discussion	Open	MRC Redlines Rcvd 1/18/21
7	Hybrid MG App Interconnection Queue	n/a	None	n/a	
8	Project/Program Caps, Rated Power	HECO	Review and provide redlines	Open	Comments in Redline
9	Anti-Islanding Provisions	HECO	Review and provide redlines	Closed	
10a	Hybrid MGO Interconnection Agmt	ALL	Review MRC Comments – IA Walk-through	Open	
10b		HECO	Clarify phoneline and soft-start ramp rate	Closed	For Review (IA)
10c		CA	Present position regarding checklist	Open	
11	Draft Mod to Rule 24 and other DER pgms	HECO	Provide draft of all Tariffs w/ revisions	Open	For Review (except Hawaii Is. Rule 14H)

Other items not identified in Items 1-11?

- Discuss PUC Redlines
  - Removal of “emergency events” from MG definition
- What action items should be placed (back to) the “parking lot”?

Proposed Timeline

TUE Jan. 5 (11am 1pm)

- Customer Definition (discussion)
- Applicability of other Tariffs (MRC presentation)
- Indemnification (HECO redlines)
- Anti-Islanding (HECO redlines)
- Hybrid Interconnection Agmt (Discuss plan to resolve)

MON Jan. 11 (11am 1pm)

- Dataset for feasibility analysis
- Hybrid MG Compensation (MRC/Ulupono presentation)
- Hybrid MG Interconnection Agreement (~~MRC/Ulupono redlines & presentation,~~ CA presentation – Disclosure Checklist)
- Draft mod to all DER tariffs (HECO redlines)

THURS Jan. 14 (1:30pm 3:30pm)

- Project/Program Caps, Rated Power (HECO redlines)
- Hybrid MG Interconnection Agreement (Line by Line Review)
- Other unresolved items

WED Jan. 20 (12pm 2pm)

- Hybrid MG Interconnection Agreement (Line by Line Review) – Continuation
- ~~MGS Tariff~~
- Hybrid Compensation
- Applicability of other Tariffs

THURS Jan. 21 (12pm-2pm)

- Microgrid Services Tariff
- ???

MON Jan. 25

- Working Group filing due

Mahalo for your time.

https://www.hawaiianelectric.com/about-us/our-vision-and-commitment/resilience/microgrid-services-tariff

Meeting Name	Date of Meeting
Microgrid Services Tariff Working Group Meeting	January 20, 2021

Agenda

Introduction, Action Item List, Jan. 25 Filing (Slides 1-4)	• Commission staff provided updates, feedback, and guidance on certain action items (below). Commission staff clarified that guidance provided in this meeting is from Commission staff and not the Commissioners', so the guidance is subject to change. o Proposed Microgrid Compensation (per MRC/Ulupono presentations) ▪ Commission staff asked for clarification on whether the intent of any hybrid model was to capture compensation by payments from the Company or by bill credits to the electric bill. Discussion suggested bill credit capture was the appropriate mechanism for the MGO to be compensated, but may warrant additional discussion. ▪ Commission staff provided guidance to the team that given the items requiring discussion on alternative compensation models, the Commission does not expect for the Working Group to resolve and adopt the alternative compensation models within the current timeframe. Commission is contemplating additional time for the Working Group to convene regarding alternative compensation models. ▪ Commission staff requested the Working Group look into adopting MRC's proposed sec. E.4 (sent via email 1/18/21): • "Alternative Hybrid Microgrids. The developer of a proposed Hybrid Microgrid may make a proposal for other compensation or joint operating arrangements to the Company, which would, if acceptable to the Company, be incorporated in a separate agreement with the Company that is subject to Commission approval." o Working Group filing expectations ▪ Commission clarified the Working Group filing should include areas of agreement, areas of disagreement. ▪ The CA and Working Group Leads discussed a one week extension to the Working Group filing, given the status of discussions. MRC, Ulupono, and HECO agreed with request. **Action Item: CA to file extension request with the Commission.** • Working Group members discussed: o Compensation for hybrid MGs in California jurisdiction – Occurs under CAISO or existing Utility Tariff structures.

	o Compensation structure may impact revisions to the disclosure checklist. o Concerns on compensation by Rule 24 for MGs that can island at their discretion. Under certain MG compensation models, ratepayers would effectively be compensating MGOs for generation while islanded, but if the MG can island at-will, there would be no value for ratepayers (in non-emergency events).
Hybrid MGO Interconnection Agreement Walk-Through (Slide 5)	• The Working Group commenced with a walk-through of the Hybrid MGO Interconnection Agreement, and reviewed Appendix II and Exhibit A. Updates based on discussion on 1/20/21 reflected in word document sent to Working Group. • Significant discussion items: o Company proposed to base the Interconnection Agreement's 3MW limit on the Total Peak Demand (as opposed to the Total Rated Capacity) to clarify the intent of the limit was to address MGs with relatively lower complexity and within the limits of a distribution feeder. Working Group agreed with the clarification. o The Company clarified that the intent of the Hybrid MGO Interconnection Agreement was to provide requirements for the operation of the microgrid, and the concept was all generating resources within the microgrid have an executed generating interconnection agreement. o MRC proposed an addition to section 1 and deletion to section 1.b to address its previous comment regarding Mobile-Sierra. The Company requested to review proposal. o The Company clarified the intent of Section 7.b-d was generally a right of entry to access the MGO's equipment. The Working Group was acceptable to the current language. o Sec. 8.a.3 (re: operating records and procedures) was discussed. MRC was concerned the Company would dictate day-to-day operation of the Microgrid; however, the Company clarified the intent was to ensure the Microgrid is tested and operates in a manner consistent with the applicable testing procedures. The Working Group was acceptable to the intent. **Action Item: Hawaiian Electric to clarify and revise language.** o Company clarified Section 14 should remain as is (leaving "Microgrid Agents") as there may be instances where information is required by the Microgrid's Agents (defined term in the Interconnection Agreement). Working Group was acceptable to reverting to original language. o
Hybrid Microgrids,	• Slides were not discussed due to time constraints. o Content in slides 10-11, 14-22 provided by MRC on Jan. 18, 2020

Hybrid MG Compensation, Applicability of Other Tariffs (Slides 6-22)	o Slide 12 listed the Company's initial questions on the proposed compensation language.
Next Steps (Slides 23-26)	• Next (and last) WG meeting scheduled Jan. 21. • **Action Item: Hawaiian Electric to send out revised version of the consolidated Interconnection Agreement.** • Agenda for meeting includes: o Hybrid MGO IA Walk-through - Continuation o Microgrid Services Tariff Walk-through o Hybrid MG Compensation (if time permits) o Applicability of Other Tariffs (if time permits)
Working Group Parking Lot (Added for reference)	• Change of ownership of Microgrid • Standby Charges or Exit Fees • Customer protection-related considerations • Microgrid/IGP procurement considerations • Considerations of gaming between utility-owned and 3rd-party MGs • Army/Military MG issues such as WG will consider nested microgrids, if appropriate • Interactions with other dockets o DER Tariff/Programs o IGP Resiliency • Consideration of societal, environmental value • Development of PPA model for hybrid MGs • Other types of microgrids that don't fit Act 200 definition • Gap in tariff for customers greater than 100kW participation & compensation in non-normal, non-island scenarios. Eg, SIA • Harmonize compensation with other grid service mechanisms o Expanded functionality from MG service and whether should be included in MST. • Contractual obligations for other grid services – Customers with existing DER/DR obligations still need to meet performance if included in a MG. • Customer approvals – Does a Hybrid MG need a full customer subscription? • Resiliency Tariff • Retail wheeling (see January 16, 2020 Commission Guidance Letter) • Compensation While Grid Connected (see January 16, 2020 Commission Guidance Letter)
Working Group Chairs:	

Marcey Chang, DCCA	Chair, Market Facilitation and Interconnection WG	mchang@dcca.hawaii.gov
Marc Asano, HE	Chair, Interconnection WG	marc.asano@hawaiianelectric.com
Ken Aramaki, HE	Chair, Market Facilitation WG	ken.aramaki@hawaiianelectric.com
Attendees:		
Anand Samtani, Hawaii PUC	Brittany Blair, Newport Consulting	Gerald Sumida, Carlsmith Ball
Andrew Nojiri, HE	Craig Nakanishi, Cades Schutte	Gina Yi, Hawaii PUC
Andrew Okabe, Hawaii PUC	Darene Matsuoka, Cades Schutte	Jennifer Potter, Hawaii PUC
Ashley Agcaoili, Hawaii PUC	Earlynne Maile, HE	Paul De Martini, Newport Consulting
Baird Brown, eco(n)law LLC	Eric Kunisaki, HE	Tracie Black, HE

Hawaiian Electric

Microgrid Services Tariff Working Group

January 21, 2021

Agenda

- Summary of Yesterday's Meeting
  - Proposed Schedule
- Hybrid MG Interconnection Agreement Walk-Through
- Microgrid Services Tariff Walk-Through
- Next Steps

Hawaiian Electric

Jan. 20 Meeting Summary

Jan. 20 Meeting Summary

- Received Commission Guidance
  - Alternative Hybrid MG Compensation
    - Mechanics of compensating MGO (credit vs. payment)
    - Not expecting MRC's language to be adopted by the WG for upcoming filing. Consider adopting MRC's proposal to Sec. E.4 (Alternative Hybrid MGs).
    - Considering additional time (less than 90 days) to discuss alternative compensation.
  - WG Filing
    - Include updated Tariff and Accompanying documents
      - Include areas of agreement and disagreement
      - Do not need to resolve alternative Hybrid Models
- WG proposed extension to filing (next slide)

Proposed Schedule

- Letter to be sent by CA today

	Commission letter, dated December 10, 2020	Proposed New Dates
Filing of areas of consensus and associated revisions of the red lines to the Microgrid Services Draft Tariff and other related documents	January 25, 2021	February 1, 2021
Parties' filings of the areas of disagreement and associated revisions of the red lines of the Microgrid Services Draft Tariff and other related documents	January 25, 2021	February 10, 2021
Parties' comments to address other Parties' areas of disagreement and associated revisions of the red lines of the Microgrid Services Draft Tariff and other related documents		February 17, 2021

Hawaiian Electric

Hybrid MGO IA Walk-Through

Continue Discussion with Word Doc

Hawaiian Electric

Microgrid Services Tariff

Discussion with Word Doc

Hawaiian Electric

Hybrid Microgrids

Opening Discussion

Hybrid Microgrids

- The objective of microgrids in Hawaii is to address identified resilience needs by enabling all customers' greater options
- The majority of Hybrid MG development in the US to-date has been pursued by communities – not large Commercial & Industrial customers
- Concerned that the discussion is ignoring community interests and a large group of typically underserved customers

- Resilience WG identified a multi-tier set of priority customers
  - The majority of Tier 1 customers are governmental organizations motivated by resilience and access to federal (e.g., DoD DCEI Program) and state government funding for MG project development (e.g., Schofield)
  - Examples of State/Local efforts at Hybrid Microgrids
    - NY Prize Program
    - California Community Microgrid Enablement Programs (CPUC Track 2)
    - Individual cities/communities, such as city of Bridgeport, CT & Ann Arbor, MI

Exhibit 2: RWG Recommended Customer Classifications by Tier

Tier 1	Tier 2	Tier 3
• Military • Telecommunications • Hospitals and critical healthcare • Water and wastewater • Emergency management and first responders	• Transportation • Hospitality • Banking and finance	• Remaining customers

Hybrid Microgrids

- Discussion of Hybrid Compensation Models is insufficient in its scope and has centered exclusively on a small set of private developers' interests
  - Hawaii currently has a greater range of DER opportunities to realize its value potential through tariffs, programs and procurements than any other state
  - There is also another ongoing proceeding discussing opportunities to maximize the value of DER

- NARUC-NASEO Report on MG Funding
  - "States with successful microgrid programs have used various sources of public capital to ensure the timely development of microgrids"
    - Bridgeport MG - Connecticut Department of Energy and Environmental Protection, the State Energy Office, provided a $2.975 million grant toward the microgrid's capital costs, with the City of Bridgeport covering the remaining $5.3 million (NARUC-NASEO Report)

  - Coordinated funding from multiple state programs could be needed
    - ✓ Developing new rate structures that microgrids can use to develop predictable revenue streams (Already exist in HI as described by report)
    - Enabling public-private capital financing options as a first step to provide more alternatives for microgrids to source capital
    - Providing public funding at key points in the microgrid financing process to reduce private investment risk in microgrid development.
    - Providing comprehensive technical assistance and support for customers considering various funding and financing options.
    - ✓ Ensuring that regulatory certainty for microgrids is present to support investor plans (MGS Tariff addresses this issue by affirming customer and hybrid MG development opportunities)
    - Empowering underserved communities to finance microgrids to meet their needs
      - California has authorized $30mm toward community hybrid microgrids and proposed another $70+ mm in a current proposed decision with a focus on "vulnerable communities"

Hawaiian Electric

Hybrid MG Compensation

MRC's Proposed Edits (1/18/21)

MRC's Proposed Edits (1/18/21)

- New definitions added
- Revision to Sec. E.2. Company Supplied Hybrid MG

~~e.~~f. Company Supplied Hybrid Microgrid means a Hybrid Microgrid in which all electric energy supplied to Microgrid Participants is supplied by the Company.

~~y.~~bb. Operator Supplied Hybrid Microgrid means a Hybrid Microgrid in which all or a portion of the electric energy supplied to the Microgrid Participants is supplied by the Microgrid Operator to the Company for the benefit of the Microgrid Participants and compensated and billed as provided in Section E.3. of this Tariff.

2. ~~Compensation for~~ Company Supplied Hybrid Microgrid~~s Operator and Microgrid Participants~~.
~~2.~~

a. ~~For a~~For ~~Hybrid~~the Microgrid Operator and all Microgrid Participants in a Company Supplied Hybrid Microgrid, all applicable energy credit rates and compensation will apply during Grid-Connected Mode and Island Mode. While operating in Island Mode, all existing applicable Customer tariffs and programs shall remain in effect and all energy delivered and sold within the Microgrid during the period will be deemed transacted with the Company pursuant to the tariffs.

b. Any Generating Facility with an appropriate Customer Interconnection Agreement executed with the Company and supplying energy to a Hybrid Microgrid during Island Mode, and without an existing means for compensation by the utility (e.g., PPA, tariff), shall be compensated by Energy Credit Rates as defined and outlined in Rule No. 24.

c. Customers within a Hybrid Microgrid shall be billed monthly for the energy supplied by the Company, in accordance with Rule No. 8, the applicable rate schedule, and Company's rules filed with the Commission.

MRC's Proposed Edits (1/18/21)

- Revision to Sec. E.2. Company Supplied Hybrid MG

3. Operator Supplied Hybrid Microgrids.

a. For the Microgrid Operator and all Microgrid Participants in an Operator Supplied Hybrid Microgrid, all applicable energy credit rates and compensation will apply during Grid-Connected Mode and Island Mode except that electric energy will be supplied to and paid for by the Company and billed to Microgrid Participants as specifically provided in Section E.3.c.

b. Any Generating Facility with an appropriate Customer Interconnection Agreement executed with the Company and supplying energy to a Hybrid Microgrid during Island Mode, and without an existing means for compensation by the utility (e.g., PPA, tariff) or the Microgrid Operator, shall be compensated by Energy Credit Rates as defined and outlined in Rule No. 24.

c. For an Operator Supplied Hybrid Microgrid, Microgrid Participants shall be billed monthly by the Company for (i) the portion of the energy supplied to the Microgrid Participant by the Company, in accordance with Rule No. 8, the applicable rate schedule, and Company's rules filed with the Commission, and (ii) the portion of the energy supplied to the Microgrid Participant by the Microgrid Operator, in accordance with the agreement executed by the Microgrid Operator and the Microgrid Participant. The Company thereafter shall pay the Microgrid Operator for the portion of the energy supplied by the Microgrid Operator at the rate charged by the Microgrid Operator to the Customers.

4. Alternative Hybrid Microgrids. The developer of a proposed Hybrid Microgrid may make a proposal for other compensation or joint operating arrangements to the Company, which would, if acceptable to the Company, be incorporated in a separate agreement with the Company that is subject to Commission approval.

~~a.~~

~~3.~~5. Resilience. Compensation for resilience grid services may be compensable under an appropriate resiliency tariff, rate, or rider.

Company's Initial Questions

- Definition – Company Supplied Hybrid MG
- Sec. 3.b. duplicated from 2.b. Sec. 2.b was originally intended to provide compensation for generating units providing resilience during island mode (emergencies) only.
- Sec. 3.c. Clarification – Is this a pass-through of an agreed cost between MGO and Participant?
  - Need to work out administrative details/cost.
  - Need to work out wires cost/charge.
  - What happens with non-payment by customer for energy? Company (and ratepayers) are in the middle of these pass-through transactions.
  - Impact of rates in DER docket?
- Confirm Hybrid MGs allowed to island in emergency situations or at the direction of the Company only. Language suggests otherwise.
- How does this work during grid-connected mode? How do you identify how much energy (and at what time) the participants used the MGO's energy vs. Company energy?
  - Impact of potential TOU rates?
- Does this proposal required the MGO to be a public utility?
- More questions will likely be raised as this is reviewed further…

Hawaiian Electric

Applicability of other Tariffs

Tariff Section 3 Revised Proposal (Jan. 5)

3. For Customer Microgrids and Hybrid Microgrids, existing tariffs and programs shall also be applicable subject to the following:

a. Notwithstanding Rule 15, A Microgrid Operator may resell electric energy received from the Company to (i) other persons within the electrical boundaries of the microgrid who have contracted to receive regular service from the microgrid and (ii) the Company; and

b. Any Company Rule or program which requires that Generating Facilities be owned or leased by a Customer or located on Customer premises to be eligible shall be deemed to include all Generating Facilities that are (i) behind the Point of Common Coupling of a Customer Microgrid and under the operating control of the Microgrid Operator and (ii) otherwise comply with the requirements of the rule or program.

HECO Proposal and Discussion

Par. 3 and 4a acceptable to MRC

Need further discussion

3. For Hybrid Microgrids, existing tariffs and programs shall also be applicable.

4. For Customer Microgrids, existing tariffs and programs shall also be applicable, subject to the following:
   a. A Microgrid Operator of a Customer Microgrid may allocate costs without markup for electric service received from the Company to other persons within the electrical boundaries of the microgrid who have contracted to receive regular service from the microgrid; and
   b. Any Company Rule or program which requires that Generating Facilities be owned or leased by a Customer or located on Customer premises to be eligible shall be deemed to include all Generating Facilities that are

      (i) behind the Point of Common Coupling of a Customer Microgrid and under the operating control of the Microgrid Operator and (ii) otherwise comply with the requirements of the rule or program.

Act 200

- The legislature further finds that without standard terms regarding interconnection and the value of microgrid services, businesses and residents developing microgrids may choose to leave the utility grid altogether, thereby weakening the overall system and increasing costs for other utility customers.
- The tariff as developed neither changes interconnection for customer microgrids nor provides any specific compensation.
- The suggestion is to at least assure that certain existing compensation programs are available to all microgrids.

Rule 22 (and 23, 24, 25, 27)

A. ELIGIBLE CUSTOMER-GENERATOR

Customer Self-Supply service is available to permanent customers ("Eligible Customer-Generator") who own (or lease from a third party) and operate (or contract to operate with a third party) a solar generating facility ("Generating Facility" or "Self-Supply System"), with a capacity of not more than one hundred kilowatts (100 kW), and where:

1. The Generating Facility, which may include an energy storage system, is located on the Eligible Customer-Generator's premises. . . .

Scenario Key

- Two requirements:
  - Own or Lease
  - On Customer-Generator premises
- Parties
  - Microgrid Operator "M"
  - First Consumer "C1"
  - Second Consumer"C2"
- Sale or distribution of power
  - Solid Arrow ⟶
- Generator/Storage
  - Blue Box M Owner shown in center
- Load
  - Yellow Box C1 Owner/Lessor shown in center
- Company Customer M
  - Indicated in Red e.g.
- Premises
  - Owned = solid box C1
    Small box indicates owner
  - Leased = dashed box C2
    Small box indicates lessee
- Equipment lease
  - Dashed arrow - - - - - →

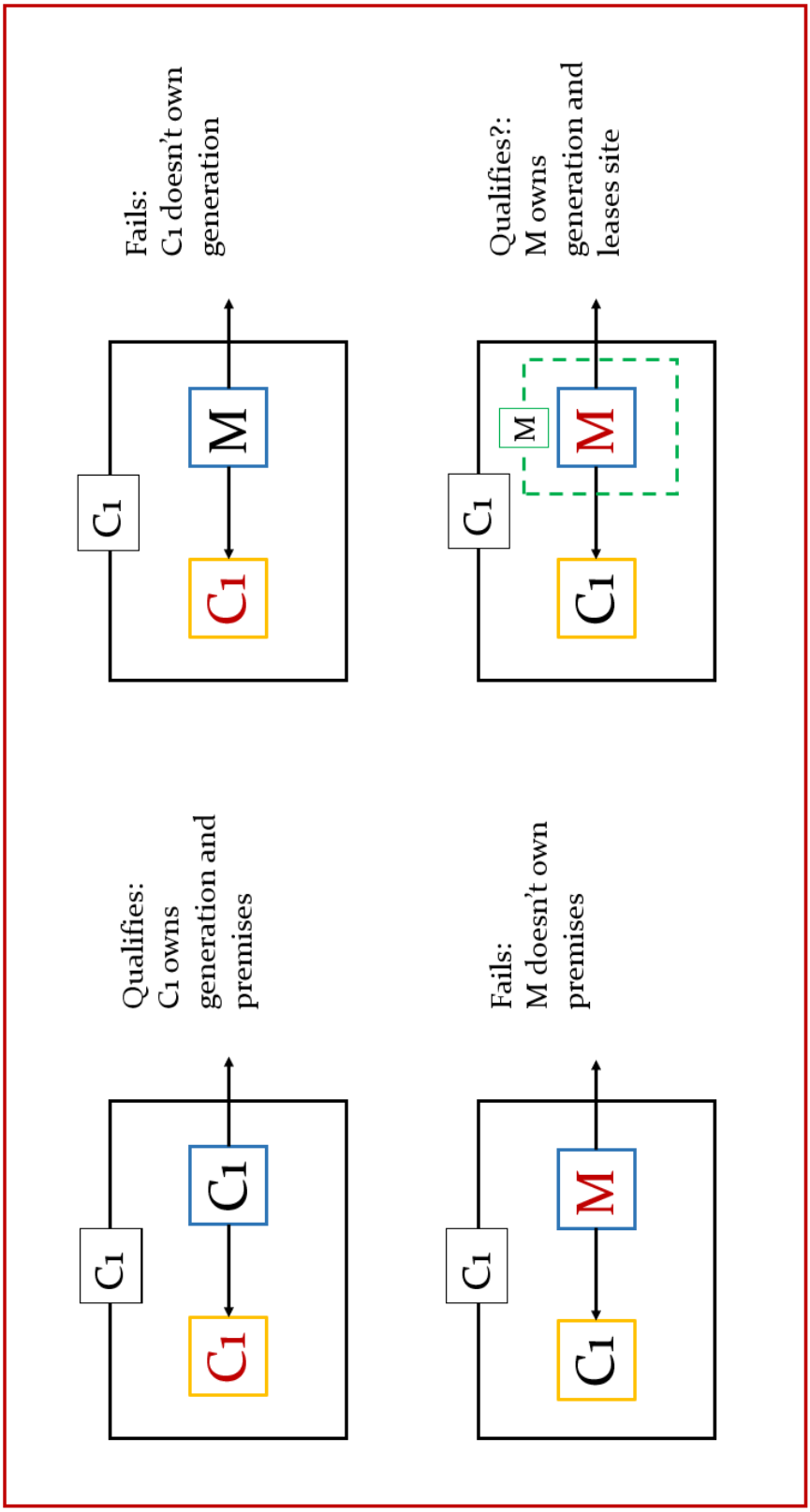
Qualifies:
C1 owns
generation and
premises
C1
C1
C1
Fails:
C1 doesn't own
generation
C1
M
C1
Fails:
M doesn't own
premises
C1
M
C1
Qualifies?:
M owns
generation and
leases site
C1
M
M
C1

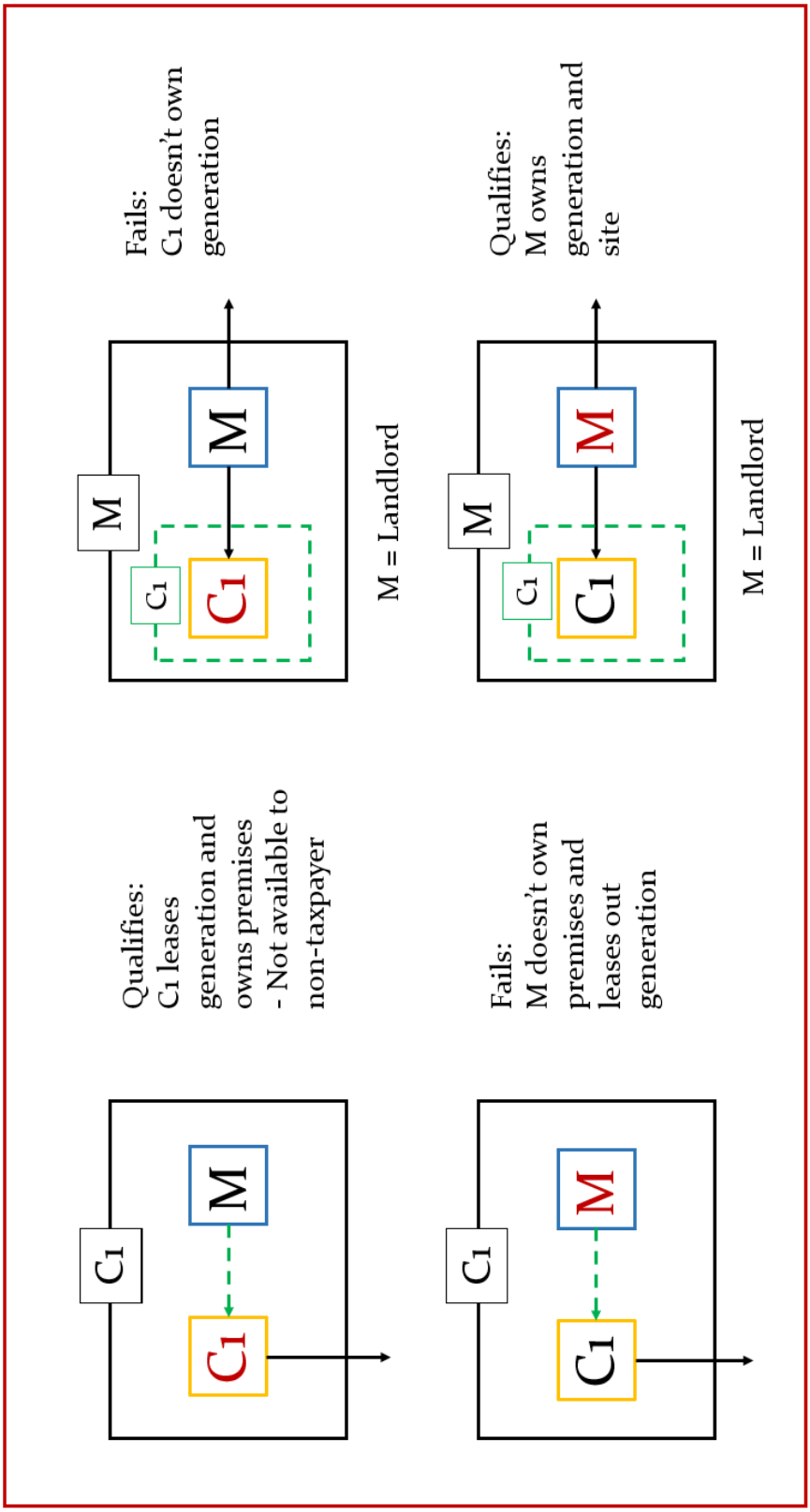
C1
M
C1
Qualifies:
C1 leases generation and owns premises
- Not available to non-taxpayer
M
C1
C1
M
Fails:
C1 doesn't own generation
M = Landlord
C1
M
C1
Fails:
M doesn't own premises and leases out generation
M
C1
C1
M
Qualifies:
M owns generation and site
M = Landlord

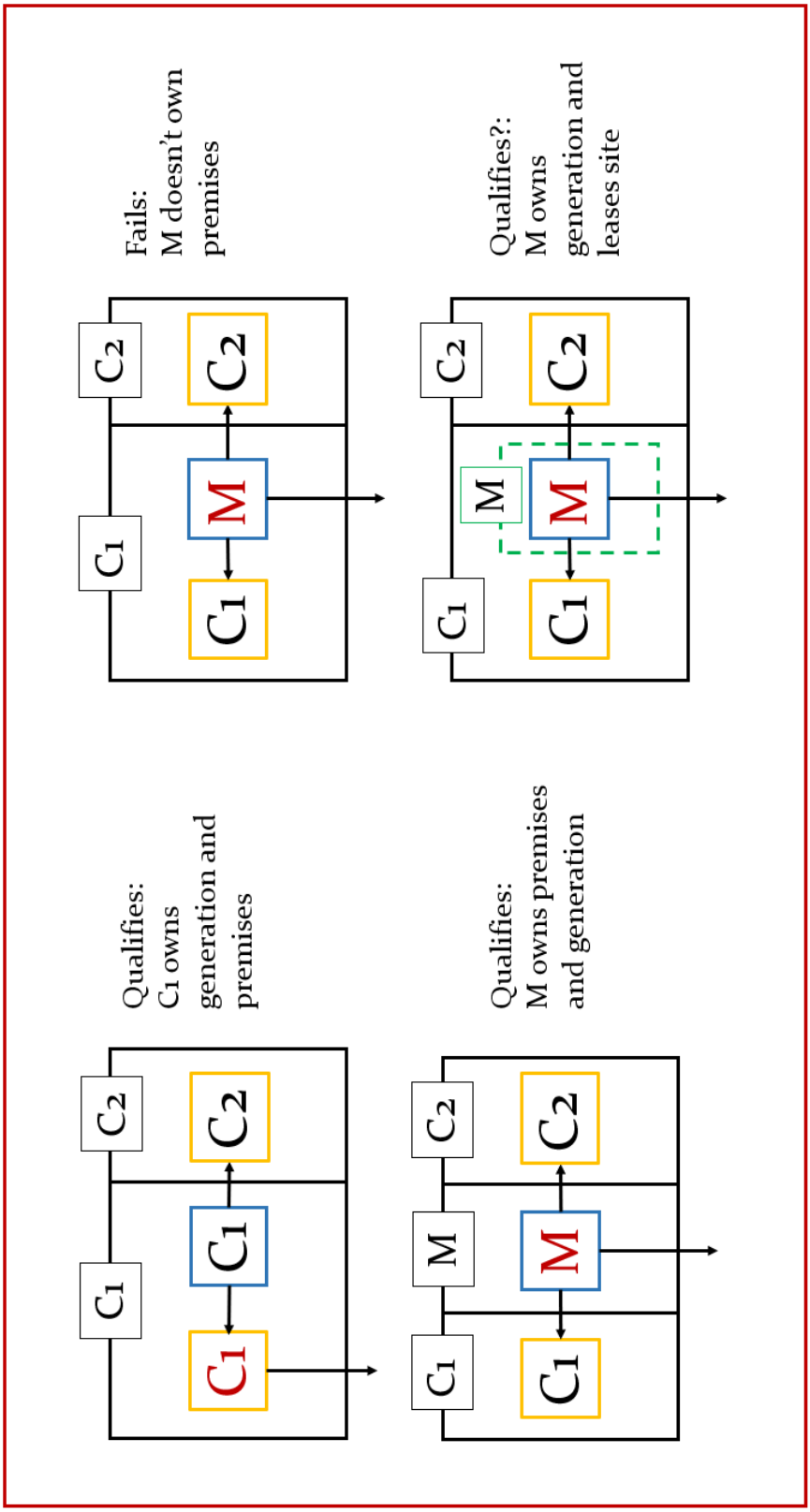
Qualifies:
C1 owns
generation and
premises
C1
C2
C1
C1
C2
Fails:
M doesn't own
premises
C1
C2
C1
M
C2
Qualifies:
M owns premises
and generation
C1
M
C2
C1
M
C2
Qualifies?:
M owns
generation and
leases site
C1
M
C2
C1
M
C2

Conclusions

- Premises is not defined
  - If it includes leaseholds (or easements, which are often used for solar installations) then the “located on premises” requirement is less limiting
- Nevertheless, the results are very idiosyncratic for the same parties with essentially the same structure
- If there are generators on different premises it gets even more complicated than these examples
- Why not simply level the playing field for all microgrids?

Hawaiian Electric

Next Steps

Action Item List

#	Title	Owner	Action	Status	Comments
1	Customer MG Interconnection Agreement	n/a	None	n/a	n/a
2	Definition of Customer	ALL	WG Discuss	Closed	Included in draft Tariff
3	Applicability of other Tariffs (i.e., Rule 15)	MRC	Present to WG		Rule 15 resolved. DER Rules being discussed.
					For Review (Tariff/IA)
5	Data set for feasibility analysis	HECO	Develop list		
6	Hybrid MG Compensation	MRC/Ulupono	Present to WG and provide redlines for discussion		MRC Redlines Rcvd 1/18/21
7	Hybrid MG App Interconnection Queue	n/a	None		
8	Project/Program Caps, Rated Power	HECO	Review and provide redlines		Comments in Redline
9	Anti-Islanding Provisions	HECO	Review and provide redlines		
10a	Hybrid MGO Interconnection Agmt	ALL	Review MRC Comments – IA Walk-through		
10b		HECO	Clarify phoneline and soft-start ramp rate		For Review (IA)
10c		CA	Present position regarding checklist		

Other items not identified in Items 1-11?

- Discuss PUC Redlines
  - Removal of “emergency events” from MG definition
- What action items should be placed (back to) the “parking lot”?

Proposed Timeline

THURS Jan. 21 (12pm 2pm)

- Hybrid MG Agreement
- Microgrid Services Tariff

MON Jan. 25 (via email)

- Consolidated document with agreements and disagreements to be sent to WG for review

FRI Jan. 29 (via email)

- Reviews to take place over the course of the week
- Finalize documents to be filed for the WG filing

MON Feb. 1

- File WG filing

Mahalo for your time.

https://www.hawaiianelectric.com/about-us/our-vision-and-commitment/resilience/microgrid-services-tariff

Meeting Name	Date of Meeting
Microgrid Services Tariff Working Group Meeting	January 21, 2021

Agenda

Introduction, Jan. 20 Meeting Summary, Proposed Schedule (Slides 1-5)	• Working Group Lead (K. Aramaki) provided a summary of the January 20 meeting (slide 4). No additions/revisions proposed by the Commission Staff. • Working Group Leads discussed the schedule extension to be requested by the CA's office on January 21. The extension allows for the Working Group to flag areas of disagreement, and additional time for Parties to respond to the Working Group filing, as well as respond to the Parties' comments.
Hybrid MGO Interconnection Agreement Walk-Through (Slide 6)	• The Working Group continued and completed a walk-through of the Hybrid MGO Interconnection Agreement. Updates based on discussion on 1/21/21 reflected in word document sent to Working Group. • Significant discussion items: o Company proposed to change the title to "Microgrid Services Tariff – Hybrid Microgrid Agreement" to clarify the Agreement is not intended to be a generation interconnection agreement. WG agreed with change. o The Working Group discussed MRC's proposed changes to Sec. 1. The Working Group flagged the section for an area of disagreement for purposes of the WG filing. o The Company provided its redlines to include remedy provisions (Sec. 2.e-g) and a Dispute Resolution clause (Sec. 25.n). Working Group to review further. o The Company provided its redlines to Sec. 11 (Personnel and System Safety) for Working Group to review. o Working Group briefly discussed MRC's proposed changes to Sec. 13.b.i. The Working Group agreed to flag this section for an area of disagreement. o The Company mentioned that Sec. 20 (Insurance) liability coverage amounts would need to be reviewed based on the change in methodology that the microgrid's size is based on Total Peak Demand.
Microgrid Services Tariff (Slide 7)	• The Working Group commenced and completed a walk-through of the Microgrid Services Tariff. Updates based on discussion on 1/21/21 reflected in word document sent to Working Group. • Significant discussion items: o Working Group agreed to table alternative hybrid compensation models (as proposed by MRC and Ulupono) for future discussions or phase.

	o Sec. 1 – "Island Mode" definition. Company proposed adding a clarification that Hybrid Microgrids may enter Island Mode under Emergency Events only. Working Group was agreeable to clarification under existing model. o MRC proposed a Sec. 4.b due to concerns with existing DER Tariff language that may create barriers for Microgrid development. MRC provided an example where a Commercial establishment leases property to a MGO to place DER to export energy. Based on MRC's application of the DER Tariffs, there would be an issue with this model. o MRC proposed additions to Sec. C.3-4 (Limitation of Liability). Working Group agreed to flag as an area of disagreement. o Working Group agreed any reference to a disclosure checklist should remain in the Tariff and Hybrid Microgrid Agreement, subject to revisions of the checklist.
Hybrid Microgrids, Hybrid MG Compensation, Applicability of Other Tariffs (Slides 8-24)	• Applicability of Other Tariffs briefly discussed with Microgrid Services Tariff walk-through. • The Company confirmed and the Working Group agreed that customers who qualify for DER Tariffs may also qualify for the Microgrid Services Tariff, but customers who qualify for the Microgrid Services Tariff may not automatically qualify for DER Tariffs.
Working Group Parking Lot (Added for reference)	• Change of ownership of Microgrid • Standby Charges or Exit Fees • Customer protection-related considerations • Microgrid/IGP procurement considerations • Considerations of gaming between utility-owned and 3rd-party MGs • Army/Military MG issues such as WG will consider nested microgrids, if appropriate • Interactions with other dockets o DER Tariff/Programs o IGP Resiliency • Consideration of societal, environmental value • Development of PPA model for hybrid MGs • Other types of microgrids that don't fit Act 200 definition • Gap in tariff for customers greater than 100kW participation & compensation in non-normal, non-island scenarios. Eg, SIA • Harmonize compensation with other grid service mechanisms o Expanded functionality from MG service and whether should be included in MST.

	• Contractual obligations for other grid services – Customers with existing DER/DR obligations still need to meet performance if included in a MG. • Customer approvals – Does a Hybrid MG need a full customer subscription? • Resiliency Tariff • Retail wheeling (see January 16, 2020 Commission Guidance Letter) • Compensation While Grid Connected (see January 16, 2020 Commission Guidance Letter)

Working Group Chairs:		
Marcey Chang, DCCA	Chair, Market Facilitation and Interconnection WG	mchang@dcca.hawaii.gov
Marc Asano, HE	Chair, Interconnection WG	marc.asano@hawaiianelectric.com
Ken Aramaki, HE	Chair, Market Facilitation WG	ken.aramaki@hawaiianelectric.com

Attendees:		
Anand Samtani, Hawaii PUC	Brittany Blair, Newport Consulting	Gerald Sumida, Carlsmith Ball
Andrew Nojiri, HE	Craig Nakanishi, Cades Schutte	Gina Yi, Hawaii PUC
Andrew Okabe, Hawaii PUC	Darene Matsuoka, Cades Schutte	Paul De Martini, Newport Consulting
Ashley Agcaoili, Hawaii PUC	Earlynne Maile, HE	Tracie Black, HE
Baird Brown, eco(n)law LLC	Eric Kunisaki, HE	

ATTACHMENT 5

O‘AHU

Proposed Modification to DER Tariff Rules:

Rule No. 14H
Rule No. 18
Rule No. 22 - 27

Superseding REVISED SHEET NO. 34A-1
Effective May 27, 2010

REVISED SHEET NO. 34A-1
Effective October 21, 2015
Proposed Changes: January 17, 2021

RULE No. 14 (Continued)

Service Connections and Facilities on Customer's Premises

H. INTERCONNECTION OF DISTRIBUTED GENERATING FACILITIES WITH THE COMPANY'S DISTRIBUTION SYSTEM

1. Interconnection Standards

a. Distributed generating facilities interconnected to the Company's electric system shall satisfy the Company's Interconnection Standards.

b. The Company's Interconnection Standards are included as Appendix I to Rule 14.

2. Definitions

For purposes of this Rule 14H, the following definitions shall apply:

a. "Distributed Generation Facility": A Generating Facility located on a Customer's premises that is interconnected with the Distribution System.

b. "Distribution System": All electrical wires, equipment and other facilities at the distribution voltage levels (such as 25kV-HECO only, 12kV, 4kV or 2.4kV) owned or provided by the utility, through which the utility provides electrical service to its customers.

c. "Generating Facility": Customer or utility-owned electrical power generation that is interconnected to the utility.

d. "Interconnect" or "interconnected" or "interconnection": The physical connection of any Distributed Generating Facility to the Distribution System, including the facilities required to provide the electric distribution service to a Customer, using electrical wires, switches, and related equipment located on either side of the point of common coupling as appropriate to their purpose and design to allow the physical connection of a Distributed Generating Facility to the Distribution System.

Docket No. 2014-0192; D&O No. 33258 filed October 12, 2015,
Transmittal Letter dated October 19, 2015.

e. "Momentary Parallel Operation": Parallel Operation for a duration less than 100 ms.

f. "Parallel Operation": The operation of a Distributed Generating Facility, while interconnected, such that customer load can be fed by the Distributed Generating Facility and Distribution System simultaneously.

3. Interconnection Agreement

a. Customers, on whose premises Distributed Generating Facilities that are interconnected to the Company's Distribution System are located, shall complete and execute Standard Interconnection Agreement with the Company provided in Appendix II or Appendix II-A of this Rule, or an Application for Non-Export Distributed Generation Facilities (Momentary-Parallel Operation) provided in Appendix II-V of the Rule, or other Company-approved application for interconnection of a Generating Facility subject to Rule 14H, and obtain Company approval of such interconnection application prior to interconnecting the Distributed Generating Facilities to the Company's Distribution System, or within one hundred fifty (150) days after the effective date of this Rule if the distributed generating facilities are already operating in parallel with the Company's system as of such date, provided that following the expiration of such one hundred fifty (150) days period, Customers shall have thirty (30) days to file a request for an extension of such one hundred fifty (150) days period with the Commission for good cause shown. The Company shall not deem the Customer to be in violation of Rule 14H while the Customer's request for extension of time to complete and execute the Standard Interconnection Agreement is under consideration by the Commission. Nothing in this provision shall affect the Company's right to refuse or discontinue service as provided in Rules 7.A.1 and 2.

b. Distributed Generating Facilities may be interconnected to the Company's Distribution System in accordance with the terms and conditions of the Standard Interconnection Agreement or other interconnection agreement approved by the Company.

c. The Standard Interconnection Agreement does not apply when (1) the Customer enters into a power purchase agreement for the sale to the Company of electric energy generated by the Distributed Generating Facility, or (2) the Customer enters into a standard agreement providing for net energy metering pursuant to Rule No. 18, (3) the customer submits an application for Non-Export Distributed Generation Facilities (Momentary-Parallel Operation) provided in Appendix II-B of this Rule, or (4) the Customer enters into any other standard interconnection agreement for a Generating Facility that is governed by Rule 14H. A customer that has an executed interconnection agreement with the Company as of the effective date of this rule shall not be required to enter into the Standard Interconnection Agreement until such time as the existing interconnection agreement is terminated.

d. Customers with Distributed Generating Facilities that are eligible for net energy metering pursuant to Chapter 269 of the Hawaii Revised Statutes, shall follow the rules and requirements set forth in Rule No. 18 for Net Energy Metering and this Rule No. 14H, as applicable.

e. Distributed Generating Facilities that incorporate the use of an energy storage device, e.g. battery storage, shall obtain an interconnection review by the Company pursuant to this Rule 14H and satisfy the Company's Interconnection Standards.

f. With respect to any purported assignment of a Company-approved interconnection agreement due to a change in ownership of the related Generating Facility, the Company may permit a Customer-Generator or Owner/Operator, as applicable, to complete, execute and return to Company an Assumption of DER Interconnection Agreement in a form acceptable to Company in lieu of executing a new interconnection agreement.

HAWAIIAN ELECTRIC COMPANY, INC.

4. Interconnection Process

a. Customer requests to interconnect Distributed Generating Facilities to the Company's Distribution System under the Standard Interconnection Agreement provided in Appendix II or Appendix II-A, or other

Company-approved application for interconnection of a Generating Facility subject to this Rule, will be processed in accordance with the procedures in the Interconnection Process Overview, which is included in Appendix III of this Rule.

b. Distributed Generating Facilities that are interconnected but will not operate in parallel with the Company's Distribution System, are not subject to the interconnection review process under this Rule 14H except that customer shall register such Distributed Generation Facilities by completing and submitting an Application for Non-Export Distributed Generation Facilities provided in Appendix II-B to this Rule 14H. Such registration shall satisfy the Customer's notice requirements set forth in Tariff Rule 3B (Change in Customer's Equipment Or Operations) and is required for purposes of determining potential load that the Company may be required to serve.

c. Generators that are not interconnected with the Company's Distribution System are not subject to the interconnection review process under this Rule 14H and are not required to be registered with the Company.

d. The Interconnection Process Overview addresses the steps in the interconnection process, the technical review process, the need for additional study, and the resolution of disputes.

5. MICROGRIDS

a. Capitalized terms used in this section are as defined in Rule No. XX, Microgrid Services Tariff.

b. During Grid-Connected Mode, the Microgrid will be

operated in parallel with the Company's System.

c. A Customer may operate its Generating Facility as part of a Customer Microgrid or be a participant in a Hybrid Microgrid.

d. A Customer who intends to operate its Generating Facility within a Customer Microgrid, or as a participant in a Hybrid Microgrid, shall notify the Company in its application through the Customer Interconnection Tool.

e. A Customer who operates its Generating Facility as part of a Microgrid after obtaining interconnection approval from the Company shall update its application through the Customer Interconnection Tool. Such notification and revision shall satisfy the Customer's notice requirements set forth in Tariff Rule 3B (Change in Customer's Equipment or Operations).

f. Customer Microgrids and Hybrid Microgrid Participants shall comply with the requirements of Rule No.XX, Microgrid Services Tariff, including Section H, Microgrid Operation.

~~d.~~

Superseding REVISED Sheet No. 38
Effective March 20, 2008

REVISED SHEET NO. 38
Effective February 6, 2014
Proposed Changes: January 17, 2021

RULE NO. 18

Net Energy Metering

A. ELIGIBLE CUSTOMER-GENERATOR

Net energy metering is available to permanent customers who own (or lease from a third party) and operate (or contract to operate with a third party) a solar, wind turbine, biomass, or hydroelectric energy generating facility, or a hybrid system consisting of two or more of these facilities, with a capacity of not more than one hundred kilowatts (100 kW) or greater amount as approved by Commission rule or order, that is:

1. located on the customer's premises,
2. operated in parallel with the Company's transmission and distribution facilities,
3. in conformance with the Company's interconnection requirements provided in Rule 14, Section H, and
4. intended primarily to offset part or all of the customer's own electrical requirements.

B. NET ENERGY METERING AGREEMENT AND INTERCONNECTION REQUIREMENTS

1. Eligible Customer-Generator with a generating facility with a capacity of 10 kW or Less shall complete and sign a standard Net Energy Metering Agreement Form (10 kW or Less) provided in Appendix I of this Rule, to receive net energy metering service. The Net Energy Metering Agreement shall not be effective until approved and executed by the Company. The Customer-Generator facility and interconnection systems must be in compliance with all applicable safety and performance standards of the National Electric Code (NEC), the Institute of Electrical and Electronic Engineers (IEEE), accredited testing laboratories such as Underwriters Laboratories (UL), and with Rule 14, Section H, Appendix I.

2. Eligible Customer-Generator with a generating facility with a capacity greater than 10 kW but not exceeding 100 kW shall complete and sign a standard Net Energy Metering and Interconnection Agreement (Greater than 10 kW But Less Than or Equal to 100 kW) provided in Appendix II of this Rule. The Net Energy Metering Agreement shall not be effective until approved and executed by the Company. The Customer-Generator facility and interconnection systems must be in compliance with all applicable safety and performance standards of the National Electric Code (NEC), the Institute of Electrical and Electronic Engineers (IEEE), accredited testing laboratories such as Underwriters Laboratories (UL), the Company’s interconnection requirements provided in Rule 14, Section H, Appendix I, and

Decision and Order 31901; Filed January 31, 2014.
Transmittal Letter Dated February 6, 2014.

subject to any other requirements provided in the standard Net Energy Metering and Interconnection Agreement.

RULE NO. 18 – Continued

Net Energy Metering

C. METERING AND BILLING

1. The Company, at its expense, may install meter(s) to record the flow of electric power in each direction. The customer shall, at its expense, provide, install and maintain all conductors, service switches, fuses, meter sockets, meter instrument transformer housing and mountings, switchboard meter test buses, meter panels and similar devices required for service connection and meter installations on the customer's premises in accordance with the Company's Rule 14, Section A.2.

2. Customers with Net Energy Metering service shall be billed monthly for the billing period, in accordance with the Company's Rule 8. Every 12 months, a reconciliation of the customer's net energy consumption supplied by the Company with the net energy produced by the Eligible Customer-Generator generating facility for that 12-month period will be performed as described in Section C.5.

   For customers with existing Net Energy Metering service, the measurement of kilowatthours supplied by the Company and the kilowatthours produced by the Eligible Customer-Generator for the first bill of the initial 12-month period under 2005 Haw. Sess. Laws Act 104 (effective July 1, 2005) shall begin at the start date of the billing period following the effective date of this tariff. For all other customers requesting Net Energy Metering service, the measurement of kilowatthours supplied by the Company and the kilowatthours produced by the Eligible Customer-Generator for the first bill of the initial 12-month period shall begin on the start date of the first billing period after the installation of the required meter(s).

3. When the electricity produced by the Eligible Customer-Generator generating facility during a billing period exceeds the electricity supplied by the Company for the same period, the customer is deemed to be a net electricity producer.

Docket No. 05-0037, D&O No. 22313 Dated March 9, 2006,
Transmittal Letter Dated March 16, 2006.

RULE NO. 18 – Continued

Net Energy Metering

In a billing period when the customer is deemed to be a net electricity producer, the customer will not be billed for the kilowatthours supplied by the Company during that billing period. For billing purposes, the customer shall instead be charged the Minimum Charge provided in the applicable rate schedule in effect during the billing period.

The excess kilowatthours produced by the Eligible Customer-Generator in each billing period, shall be carried over to the next billing period(s) within the current 12-month period, as a monetary credit and applied only to the Energy Charge, plus adjustments applicable to the Energy Charge, as well as adjustments based on kWh consumption, if any, for the customer's net kilowatthour consumption in the succeeding billing period within the current 12-month period. Adjustments applicable to the Energy Charge include the Power Factor Adjustment, the Supply Voltage Delivery Adjustment, the IRP Cost Recovery Adjustment, Temporary Rate Adjustment and other similar adjustments applicable to the Energy Charge that are in effect. Adjustments based on kWh consumption include the Energy Cost Adjustment, the Residential DSM Adjustment, the Commercial & Industrial DSM Adjustment, and other similar adjustments based on kWh consumption that are in effect. When the customer is billed the Minimum Charge in any billing period, the customer's cumulative net monetary credit shall <u>not</u> be applied to the Minimum Charge.

The customer's cumulative net monetary credit shall also not be applied to the Demand Charge, Customer Charge, adjustments applicable to the Demand and Customer Charges and other similar rate adjustments applicable to the Demand and Customer Charges that are in effect.

a. For customers served under Schedule R or Schedule TOU-R, the monetary credit for the excess kilowatthours produced by the Eligible Customer-Generator shall be calculated by multiplying the number of excess kilowatthours produced by the Eligible Customer-Generator by the Energy Charge (i.e., Non-Fuel Energy Charge plus the Base Fuel Energy Charge) provided in Schedule R, plus the adjustments applicable to the Energy Charge and the adjustments based on kWh consumption.

Docket No. 05-0037, D&O No. 22313 Dated March 9, 2006,
Transmittal Letter Dated March 16, 2006.

RULE NO. 18 – Continued

Net Energy Metering

b. For customers served under Schedule G, the monetary credit for the excess kilowatthours produced by the Eligible Customer-Generator shall be calculated by multiplying the excess kilowatthours produced by the Eligible Customer-Generator by the Energy Charge provided in Schedule G plus the adjustments applicable to the Energy Charge and the adjustments based on kWh consumption.

c. For customers served under the rate schedules with load-factor block energy rates, such as Schedule J, including those customers served under the load management Riders T, M, and I the monetary credit for the excess kilowatthours produced by the Eligible Customer-Generator shall be calculated by multiplying the excess kilowatthours produced by the Eligible Customer-Generator by the weighted average energy rate of the applicable rate schedule effective during the billing period, plus the adjustments applicable to the Energy Charge and the adjustments based on kWh consumption.

d. For customers served under Schedule U, the monetary credit for the excess kilowatthours produced by the Eligible Customer-Generator shall be calculated by multiplying the excess kilowatthours produced by the Eligible Customer-Generator by the weighted average energy rate of Schedule PS, plus the adjustments applicable to the Energy Charge and the adjustments based on kWh consumption.

e. For customers served under the load management riders such as Rider T which provides energy rate adjustments to the Energy Charge in the applicable rate schedule, the customer’s net monetary credit, if any, shall be applied to the customer’s Energy Charge including the Energy Charge in the applicable rate schedule and the energy rate adjustments provided in the Rider, plus the adjustments applicable to the Energy Charge and the adjustments based on kWh consumption.

4. When the electricity supplied by the Company to the customer during a billing period exceeds the electricity produced by the Eligible Customer-Generator

Docket No. 05-0037, D&O No. 22313 Dated March 9, 2006,
Transmittal Letter Dated March 16, 2006.

RULE NO. 18 – Continued

Net Energy Metering

generating facility for the same period, and also exceeds any unused cumulative credits for excess electricity supplied by the Eligible Customer-Generator carried over from the prior months since the last 12-month reconciliation period, the customer is deemed to be a net electricity consumer.

For billing purposes, the customer shall be charged for the excess kilowatthours supplied by the Company based on the applicable rate schedule in effect during the billing period. The payment for excess kilowatthours supplied by the Company, however, will take into consideration any unused cumulative credits to the extent provided for in Section C.3. of this Rule 18.

In a billing period in which the customer is deemed to be a net electricity consumer, the customer will also be billed for other applicable charges, base rate adjustments and non-base rate adjustments, to the extent the amount exceeds the Minimum Charge; if such amount does not exceed the Minimum Charge, the customer will be billed the Minimum Charge, plus any rate adjustment that may apply to the Minimum Charge.

5. The kilowatthours supplied by the Company and the kilowatthours produced by the Eligible Customer-Generator for each billing period shall be recorded in each billing period of the 12-month period. Coincident with the last bill of the 12-month period following the start date of the customer's billing under the net energy metering contract, and for each 12-month period thereafter, the (i) Energy Charge plus adjustments applicable to the Energy Charge and adjustments based on kWh consumption, less any monetary credits applied during the 12-month period for net kilowatthours produced by the Eligible Customer-Generator ("Remaining Energy Charge Balance"), and (ii) the available cumulative credit balance (i.e., cumulative net monetary credit for net kilowatthours produced by the Eligible Customer-Generator for the 12-month period remaining after the subtraction of the monetary credits previously credited to the customer during the 12-month period for net

Docket No. 05-0037, D&O No. 22313 Dated March 9, 2006,
Transmittal Letter Dated March 16, 2006.

kilowatthours produced by the Eligible Customer-Generator) will be compared to determine whether the customer is entitled to a refund of remaining Energy

Charges plus adjustments applicable to the Energy Charge and adjustments based on kWh consumption. If the available cumulative credit balance equals, or exceeds the Remaining Energy Charge Balance, the Remaining Energy Charge Balance will be refunded. If the Remaining Energy Charge Balance is greater than the available cumulative credit balance at the end of the 12-month period, the amount of the refund will be capped at the available cumulative credit balance.

The Energy Charge shall include the customer's Energy Charge for each billing period within the 12-month period, plus adjustments applicable to the Energy Charge and adjustments based on kWh consumption, except for those billing periods when the customer was billed the Minimum Charge provided in the applicable rate schedule. Any monetary credits for excess kilowatthours produced by the Eligible Customer-Generator that remain unused at the end of each 12-month period shall expire and not be carried over to the next 12-month period. The customer shall not be compensated for such excess kilowatthours produced by the Eligible Customer-Generator unless the Company enters into a purchase power agreement with the Eligible Customer-Generator.

If an Eligible Customer-Generator terminates its Net Energy Metering service under Rule 18 prior to the end of any 12-month period, the Company shall reconcile the Energy Charge plus adjustments applicable to the Energy Charge and adjustments based on kWh consumption, less monetary credits previously applied, to the cumulative credit balance at the end of the billing period when service was terminated, similar to the reconciliation that would have been performed at the end of the normal 12-month period.

6. The kilowatthours supplied by the Company and, if any, the kilowatthours produced by the Eligible Customer-Generator, including an accounting of the cumulative monetary credits for the excess kilowatthours produced by the Eligible Customer-Generator since the last 12-month period reconciliation, the credits applied in each billing period of the current 12-month period and

the remaining unused credits, if any, will be included in the customer's regular billing statement.

D. MAXIMUM NET ENERGY METERING CAPACITY

Net energy metering will be made available to customers on a first come first serve basis, and until the sum of the total rated generating capacity of all net metered customer facilities equals approximately 1.0% of the Company's current system peak demand or different level as approved by Commission rule or order, with 40% of the 1.0% system peak demand reserved for eligible Customer-Generators with a generator capacity size of 10 kW or less.

E. INTERCONNECTION PROCESS

1. Eligible Customer-Generator requests to interconnect and operate a generating facility in parallel with the Company's electric system will be processed in accordance with the procedures in the Interconnection Process Overview provided in Appendix III of this Rule. Under no circumstances shall a Customer-Generator interconnect and operate a generating facility in parallel with the Company's electric system without prior written approval by the Company in the form of a fully executed Net Energy Agreement.

2. Generating facilities that incorporate the use of an energy storage device, e.g. battery storage, regardless of whether such energy storage device is intended to operate in parallel with the Company's transmission and/or distribution facilities, shall obtain an interconnection review by the Company pursuant to this Rule.

3. Energy storage systems that are intended to be installed by an Eligible Customer-Generator after Company's execution of a Net Energy Metering Agreement shall constitute a material change and addition to a generating facility and shall require interconnection review pursuant to this Rule prior to installation.

4. The Interconnection Process Overview addresses the steps in the interconnection process, the technical review process, the need for additional study, and the resolution of disputes.

F. MICROGRIDS

1. Capitalized terms used in this section are as defined in Rule No. XX, Microgrid Services Tariff.

2. During Grid-Connected Mode, the Microgrid will be operated in parallel with the Company's System.

Effective Month Day, Year Effective Month Day, Year

RULE NO. 18 – Continued

Net Energy Metering

3. A Customer may operate its Generating Facility as part of a Customer Microgrid or be a participant in a Hybrid Microgrid.

4. A Customer who intends to operate its Generating Facility within a Customer Microgrid, or as a participant in a Hybrid Microgrid, shall notify the Company in its application through the Customer Interconnection Tool.

5. A Customer who operates its Generating Facility as part of a Microgrid after obtaining interconnection approval from the Company shall update its application through the Customer Interconnection Tool. Such notification and revision shall satisfy the Customer's notice requirements set forth in Tariff Rule 3B (Change in Customer's Equipment or Operations).

6. Customer Microgrids and Hybrid Microgrid Participants shall comply with the requirements of Rule No.XX, Microgrid Services Tariff, including Section H, Microgrid Operation.

Superseding Sheet No. 43
Effective August 18, 2016

REVISED SHEET NO. 43
Effective February 5, 2018
Proposed Changes: January 17, 2021

Rule No. 22

CUSTOMER SELF-SUPPLY

A. ELIGIBLE CUSTOMER-GENERATOR

Customer Self-Supply service is available to permanent customers ("Eligible Customer-Generator") who own (or lease from a third party) and operate (or contract to operate with a third party) a solar generating facility ("Generating Facility" or "Self-Supply System"), with a capacity of not more than one hundred kilowatts (100 kW), and where:

1. The Generating Facility, which may include an energy storage system, is located on the Eligible Customer-Generator's premises,

2. The Generating Facility is sized and designed such that all of the Generating Facility's output is intended to offset all or part of the Eligible Customer-Generator's own electrical requirements ("Host Load"),

3. The Eligible Customer-Generator does not intend to export electrical energy to the utility system, except when permitted to provide Grid Support as set forth in Appendix II attached hereto,

4. The Generating Facility is in conformance with the Company's interconnection requirements provided in Rule No. 14, Paragraph H, and

5. The Generating Facility shall be designed and configured to meet the Technical Specifications set forth in Appendix II attached hereto.

B. INTERCONNECTION AGREEMENT AND REQUIREMENTS

1. Eligible Customer-Generator shall complete and sign an application for service and a Standard Interconnection Agreement For Self-Supply Systems (100 kW or less) provided as Appendix I of this Rule ("Interconnection Agreement"), to receive Customer Self-Supply service, which shall not be effective until approved and executed by the Company. Where the Eligible Customer-Generator is not the person or entity in whose name electric service is rendered for the Eligible Customer-Generator's premises where the Generating Facility is located, i.e. where a landlord-tenant relationship exists, only the Eligible Customer-Generator shall be required to complete and sign the application for service and the Interconnection Agreement.

2. The Eligible Customer-Generator's Generating Facility and interconnection systems must be in compliance with all applicable safety and performance standards of the National Electric Code (NEC), the Institute of Electrical and Electronic Engineers (IEEE), accredited testing laboratories such as Underwriters Laboratories (UL), the Company's interconnection requirements provided in Rule No. 14. Section H, Appendix I, and is subject to any other requirements provided in the Interconnection Agreement.

Order No. 35266 dated February 5, 2018, Docket No. 2014-0192

Rule No. 22 - Continued

CUSTOMER SELF-SUPPLY

C. METERING AND BILLING

1. The Company, at its expense, may install meter(s) to record the flow of electric power in each direction. The Eligible Customer-Generator shall, at its expense, provide, install and maintain all conductors, service switches, fuses, meter sockets, meter instrument transformer housing and mountings, switchboard meter test buses, meter panels and similar devices required for service connection and meter installations on the customer's premises in accordance with the Company's Rule No. 14, Section A.2.

2. Eligible Customer-Generators served under this tariff who also receive energy from the Company shall be billed monthly for the energy supplied by the Company, in accordance with the Company's Rule No. 8, the applicable rate schedule, and the Company's rules filed with the Commission.

3. All rates, terms, and conditions from the applicable rate schedule will apply except for the minimum charge. The minimum charge shall be as follows:

   Applicable Rate Schedule:

Schedule R, TOU-R, TOU EV	$25.00 per month
Schedule G, TOU-G,	$50.00 per month
Schedule J, TOU-J, U, SS	Per Rate Schedule
Schedule DS	Per Rate Schedule
Schedule P	Per Rate Schedule
Schedule F	Per Rate Schedule
Schedule EV-R, EV-C, EV-F	Per Rate Schedule

4. Company's agreement to accept inadvertently exported electric power from the Generating Facility under this tariff is solely an accommodation. Neither this tariff nor the Interconnection Agreement provide for, require or otherwise obligate Company to measure, purchase, transmit, distribute, or store any electric power that may be delivered to Company's distribution system by Eligible Customer-Generator.

D. INTERCONNECTION PROCESS

1. Eligible Customer-Generator requests to interconnect and operate a Generating Facility in parallel with the Company's electric system will be processed in accordance with the procedures in the Interconnection Process Overview provided in Appendix III of Rule 14, Paragraph H. Generating Facilities that meet the Technical Specifications stated in Appendix II to this Rule shall qualify for expedited interconnection subject to the terms and conditions set forth in Company Rule 14, Section H, Appendix III.
2. Under no circumstances shall a Customer-Generator interconnect and operate a Generating Facility in parallel with the Company's electric system without prior written approval by the Company in the form of a fully executed Interconnection Agreement.

HAWAIIAN ELECTRIC COMPANY, INC.

Docket No. 2014-0192; D&O No. 33258 filed October 12, 2015,
Transmittal Letter Dated October 19, 2015.

Rule No. 22 - Continued

CUSTOMER SELF-SUPPLY

F. MICROGRIDS

1. Capitalized terms used in this section are as defined in Rule No. XX, Microgrid Services Tariff.

2. During Grid-Connected Mode, the Microgrid will be operated in parallel with the Company's System.

3. A Customer may operate its Generating Facility as part of a Customer Microgrid or be a participant in a Hybrid Microgrid.

4. A Customer who intends to operate its Generating Facility within a Customer Microgrid, or as a participant in a Hybrid Microgrid, shall notify the Company in its application through the Customer Interconnection Tool.

5. A Customer who operates its Generating Facility as part of a Microgrid after obtaining interconnection approval from the Company shall update its application through the Customer Interconnection Tool. Such notification and revision shall satisfy the Customer's notice requirements set forth in Tariff Rule 3B (Change in Customer's Equipment or Operations).

6. Customer Microgrids and Hybrid Microgrid Participants shall comply with the requirements of Rule No.XX, Microgrid Services Tariff, including Section H, Microgrid Operation.

Docket No. 2014-0192; D&O No. 33258 filed October 12, 2015,
Transmittal Letter Dated October 19, 2015.

Superseding Sheet No. 45
Effective October 21, 2015

REVISED SHEET NO. 45
Effective June 13, 2016
Proposed Changes: January 17, 2021

Rule No. 23

CUSTOMER GRID SUPPLY

A. AVAILABILITY FOR CUSTOMER-GENERATORS

Customer Grid-Supply service is available to Eligible Customer-Generators who own or lease from a third party and operate or contract to operate with a third party a solar, wind turbine, biomass, or hydroelectric energy generating facility, or a hybrid system consisting of two or more of these facilities ("Generating Facility" or "Grid-Supply System"), with a capacity of not more than one hundred kilowatts (100 kW) and where:

1. The Generating Facility which may include an energy storage system, is located on the Eligible Customer-Generator's premises,

2. The Generating Facility will be operated in parallel with the Company's transmission and distribution facilities,

3. The Generating Facility is in conformance with the Company's interconnection requirements provided in Rule No. 14, Paragraph H.

4. The Generating Facility is sized and designed such that all of the Generating Facility's output is intended to offset all or part of the Eligible Customer-Generator's own electrical requirements ("Host Load")

B. GRID SUPPLY INTERCONNECTION AGREEMENT

1. Eligible Customer-Generator shall complete and sign an application for service and a standard Grid-Supply Interconnection Agreement (100 kW or less) provided as Appendix I of this Rule ("Interconnection Agreement"), to receive Grid-Supply service. Where the Eligible Customer-Generator is not the person or entity in whose name electric service is rendered for the Eligible Customer-Generator's premises where the Generating Facility is located, i.e. where a landlord-tenant relationship exists, only the Eligible Customer-Generator shall be required to complete and sign the application for service and the Interconnection Agreement.

2. The Eligible Customer-Generator's Generating Facility and interconnection systems must be in compliance with all applicable safety and performance standards of the National Electric Code (NEC), the Institute of Electrical and Electronic Engineers (IEEE), accredited testing laboratories such as Underwriters Laboratories (UL), the Company's interconnection requirements provided in Rule No. 14. Section H, and is subject to any other requirements provided in the Interconnection Agreement.

C. METERING AND BILLING

1. The Company, at its expense, may install meter(s) to record the flow of electric power in each direction. The Eligible Customer-Generator shall, at its expense, provide,

install and maintain all conductors, service switches, fuses, meter sockets, meter instrument transformer housing and mountings, switchboard meter test buses, meter panels and similar devices required for service connection and meter installations on the customer's premises in accordance with the Company's Rule No. 14, Section A.2.

2. Eligible Customer-Generators served under this tariff who also receive energy from the Company shall be billed monthly for the energy supplied by the Company, in accordance with the Company's Rule No. 8, the applicable rate schedule, and the Company's rules filed with the Commission.

3. All rates, terms, and conditions from the applicable rate schedule will apply except for the minimum charge. The minimum charge shall be as follows:

Applicable Rate Schedule:

Schedule R, TOU-R, TOU EV	$25.00 per month
Schedule G, TOU-G,	$50.00 per month
Schedule J, TOU-J, U, SS	Per Rate Schedule
Schedule DS	Per Rate Schedule
Schedule P	Per Rate Schedule
Schedule F	Per Rate Schedule
Schedule EV-F	Per Rate Schedule

4. The measurement of the kWh supplied by the Company to the Customer-Generator and the kWh received by the Company from the Customer shall begin on the date of installation of the required meter(s) or Company's approval to interconnect the Generating Facility, whichever comes later. Each subsequent billing month shall represent the Customer-Generator's reconciliation period.

5. All kWh received by the Company from the Eligible Customer-Generator shall be assigned Energy Credits. The Energy Credits for the billing period shall be calculated as the applicable Energy Credit Rate multiplied by the energy received by the Company from the Customer-Generator during the billing period, or the energy delivered by the Company to the Customer-Generator, whichever is less. The applicable Energy Credit Rates for each rate schedule shall be as follows:

Energy Credit Rates for Each Applicable Rate Schedule:

Schedule R, TOU-R, TOU EV	15.07 cents per kWh
Schedule G, TOU-G	15.07 cents per kWh
Schedule J, TOU-J, U, SS, EV-F	15.07 cents per kWh
Schedule DS	15.07 cents per kWh
Schedule P	15.07 cents per kWh
Schedule F	15.07 cents per kWh

Energy Credit Rates shall be fixed at the above levels through October 20, 2022. Thereafter, the applicable Energy Credit Rates shall be subject to any future modification by the Commission.

In each billing period, the Eligible Customer-Generator's available Energy Credits, shall be applied against the total of the electric bill calculated under the applicable rate schedule for the energy delivered by the Company to the Customer-Generator in the billing period. Such Energy Credits applied shall appear as a separate line item on the customer bill. Application of Energy Credits may only reduce the electric bill to an amount equal to the minimum charge for the applicable rate schedule.

6. Any Energy Credits that are not applied in each billing period shall be forfeited.

D. INTERCONNECTION PROCESS

1. Eligible Customer-Generator requests to interconnect and operate a Generating Facility in parallel with the Company's electric system will be processed in accordance with the procedures in the Interconnection Process Overview provided in Appendix III of Rule 14, Paragraph H.

2. Under no circumstances shall a Customer-Generator interconnect and operate a Generating Facility in parallel with the Company's electric system without prior written approval by the Company in the form of a fully executed Interconnection Agreement.

E. MICROGRIDS

1. Capitalized terms used in this section are as defined in Rule No. XX, Microgrid Services Tariff.

2. During Grid-Connected Mode, the Microgrid will be operated in parallel with the Company's System.

Rule No. 23

CUSTOMER GRID SUPPLY – Continued

3. A Customer may operate its Generating Facility as part of a Customer Microgrid or be a participant in a Hybrid Microgrid.

4. A Customer who intends to operate its Generating Facility within a Customer Microgrid, or as a participant in a Hybrid Microgrid, shall notify the Company in its application through the Customer Interconnection Tool.

5. A Customer who operates its Generating Facility as part of a Microgrid after obtaining interconnection approval from the Company shall update its application through the Customer Interconnection Tool. Such notification and revision shall satisfy the Customer's notice requirements set forth in Tariff Rule 3B (Change in Customer's Equipment or Operations).

6. Customer Microgrids and Hybrid Microgrid Participants shall comply with the requirements of Rule No.XX, Microgrid Services Tariff, including Section H, Microgrid Operation.

Superseding Sheet No. 46A-1
Effective October 21, 2015

REVISED SHEET NO. 46A-1
Effective June 13, 2016

APPENDIX 1

GRID-SUPPLY INTERCONNECTION AGREEMENT

(100 kW or less)

This Grid-Supply Interconnection Agreement (100 kW or less) ("Agreement") is made by and between:

Hawaiian Electric Company, Inc. ("Company"),

_____ ("Customer-Generator") and, if applicable,

_____ ("Owner/Operator"),

and is made, effective and binding as of To be filled out by the Company ("Effective Date"). Company and Customer-Generator may be referred to individually as a "Party" and collectively as the "Parties".

WHEREAS, Company is an operating electric public utility subject to the Hawaii Public Utilities Law, Hawaii Revised Statutes, Chapter 269, and the rules and regulations of the Hawaii Public Utilities Commission ("Commission");

WHEREAS, the Customer-Generator receives permanent service from the Company;

WHEREAS, the Customer-Generator qualifies as an "Eligible Customer-Generator," as defined in the Company's Customer Grid-Supply Tariff;

WHEREAS, the Customer-Generator intends to construct a generating facility, as further described herein ("Generating Facility") and desires to interconnect and operate the Generating Facility in parallel with the Company's electric system;

WHEREAS, the Owner/Operator, may be a person or entity other than the Customer-Generator, who owns and operates the Generating Facility.

NOW, THEREFORE, in consideration of the premises and the respective promises herein, the Company and the Customer-Generator, and if applicable, the Owner/Operator, hereby agree as follows:

1. **Notice and Disclaimer Regarding Future Rate and Tariff Modifications**. This Agreement shall, at all times, be subject to modification by the Commission as said Commission may, from time to time, direct in the exercise of its jurisdiction. Without limiting the foregoing, Customer-Generator expressly acknowledges the following:

   - The Grid Supply Tariff is subject to modification by the Hawaii Public Utilities Commission ("Commission"). **The credit rate associated with any electricity exported to the grid from your Generating Facility will be fixed for two (2) years**

from the effective date of the Grid-Supply Tariff. Thereafter, the applicable Energy Credit Rates shall be subject to any future modification by the Commission.

- **Your Agreement and Generating Facility shall be subject to any future modifications ordered by the Commission. Such modifications may positively or negatively impact any potential savings in your electricity bill that were calculated by you or presented to you to support your decision to buy or lease a Generating Facility and may otherwise change the value of your Agreement and Generating Facility. You agree to pay for any costs related to such Commission-ordered modifications**.

BY SIGNING BELOW, YOU ACKNOWLEDGE THAT YOU HAVE READ, UNDERSTAND AND AGREE TO THE ABOVE NOTICE AND DISCLAIMER. FURTHER, BY SIGNING BELOW, YOU CONFIRM YOUR UNDERSTANDING THAT ANY POTENTIAL SAVINGS IN YOUR ELECTRICITY BILL THAT WERE CALCULATED BY YOU OR PRESENTED TO YOU TO SUPPORT YOUR DECISION TO BUY OR LEASE A GENERATING FACILITY MAY CHANGE.

2. **Effectiveness of Agreement**. This Agreement shall not be effective until approved and executed by each Party, i.e. upon the Effective Date. Customer-Generator shall not interconnect and operate the Generating Facility in parallel with the Company's system prior to approval and execution of this Agreement by the Company, except to extent necessary to obtain governmental or utility approvals. Until this Agreement is effective, no Party shall have any legal obligations arising hereunder, express or implied, and any actions taken by a Party in reliance on the terms of this Agreement prior to the Effective Date shall be at that Party's own risk.

3. **Term and Termination.** This Agreement shall continue on a month-to-month basis from the Effective Date. Customer-Generator may terminate this Agreement at any time with thirty (30) days' written notice. Company may terminate this Agreement at any time if Customer-Generator fails to comply with any term of this Agreement or if Customer-Generator fails to be an Eligible Customer-Generator.

4. **Generating Facility Description**. For the purposes of this Agreement, the "Generating Facility" is defined as the equipment and devices, and associated appurtenances, owned by the Customer-Generator, which produce electric energy for use by the Customer-Generator and are to be interconnected and operated in parallel with the Company's system. The Generating Facility is identified in Exhibits A (Description of Generating Facility) and, if applicable, Exhibit A-1 (Description of Generating Facility- Additional Information) attached hereto.

5. **Scope of Agreement**. The Parties understand and agree that this Agreement applies only to the operation of Customer-Generator's Generating Facility described in Exhibit A attached hereto.

6. **Parallel Operation**. Company shall allow Customer-Generator to interconnect and operate the Generating Facility in parallel with the Company's distribution system in accordance with the terms and conditions of this Agreement and Company Rule 14, Paragraph H (Interconnection of

Distributed Generating Facilities Operating in Parallel With The Company's Electric System) ("Rule 14H").

7. **Permits and Licenses**. Customer-Generator shall be responsible for the design, installation, operation, and maintenance of the Generating Facility and shall obtain at its expense, and maintain any required governmental authorizations and/or permits for the construction and operation of the Generating Facility. Customer-Generator shall not commence parallel operation of the Generating Facility until Company has provided written approval. Company shall provide such written approval within fifteen (15) business days from Company's receipt of a copy of the final inspection or approval of the Generating Facility, which has been issued by the governmental authority having jurisdiction to inspect and approve the installation. Company's written approval shall not be unreasonably withheld. Company shall have the right to have its representatives present at the final inspection made by the governmental authority having jurisdiction to inspect and approve the installation of the Generating Facility. Customer-Generator shall be required to notify Company in accordance with the terms of Section 19 (Notices), herein, at least five (5) business days prior to such inspection.

8. **Installation**.

(a) Design, installation, operation and maintenance of the Generating Facility shall include appropriate control and protection equipment as specified by the Company, including but not limited to an automatic load-break device such as a circuit breaker or inverter and a manual disconnect that has a visible break or breaker with rack-out capability to isolate the Generating Facility from the Company's system. The manual disconnect device must be accessible by the Company and be capable of being locked by the Company in the open position, to establish working clearance for maintenance and repair work in accordance with the Company's safety rules and practices. The disconnect devices shall be furnished and installed by the Customer-Generator and are to be connected between the Generating Facility and the Company's electric system. The disconnect devices shall be located in the immediate vicinity of the electric meter serving the Customer-Generator. The manual disconnect device shall be, at a minimum, clearly labeled "Customer-Generator System Disconnect". With permission of the Company, the disconnect devices may be located at an alternate location which is readily and safely accessible to the Company on a 24-hour basis. Such alternate location shall be clearly identified with signage placed in the immediate vicinity of the electric meter serving the Customer-Generator.

(b) The Customer-Generator grants access to the Company to utilize the disconnect device, if needed. The Customer-Generator shall obtain the authorization from the owner and/or occupants of the premises where the Generating Facility is located that allows the Company to access the Generating Facility for the purpose specified in this Agreement. Company may enter premises where the Generating Facility is located, as permitted by law or tariff, for the following purposes: (a) to inspect Generating Facility's protective devices and read or test meter(s); and (b) to disconnect the Generating Facility and/or service to Customer-Generator, whenever in Company's sole opinion, a hazardous

condition exists and such immediate action is necessary to protect persons, Company's facilities, or property of others from damage or interference caused by the Generating Facility, or the absence or failure of properly operating protective device.

(c) Under no circumstances shall a Customer-Generator interconnect and operate a generating facility in parallel with the Company's electric system without prior written approval by the Company in the form of a fully executed Agreement.

(d) Once a Generating Facility is interconnected to the Company's system, the Company reserves the right to require the installation of, or modifications to, equipment determined by the utility to be necessary to facilitate the delivery of reliable electric service to its customers, subject to the requirement that such installation or modification be consistent with applicable interconnection standards (e.g., Rule 14H). The Company shall provide a written explanation of the need for such installation or modification. Such installation or modification shall be made by mutual agreement of the Company and the Customer-Generator. Any disputes related to this provision shall be resolved according to the dispute resolution process described in Rule 14H.

9. **Metering**. Within fifteen (15) days of execution of this Agreement, the Company will supply, own, and maintain all necessary meters and associated equipment utilized for billing and energy purchase. The meters will be tested and read in accordance with the rules of the Commission and the Company. The Customer-Generator, at its expense, shall provide, install and maintain all conductors, service switches, fuses, meter sockets, meter instrument transformer housing and mountings, switchboard meter test buses, meter panels and similar devices required for service connection and meter installations on the Customer-Generator's premises in accordance with the Company's Rule 14H.

10. **Interconnection Facilities**.

(a) Customer-Generator-Owned Interconnection Facilities (for Generating Facilities Larger than (30 kW or with three-phase electrical service).

(1) The Customer-Generator shall furnish, install, operate and maintain, at its cost, the interconnection facilities (such as circuit breakers, relays, switches, synchronizing equipment, monitoring equipment, and control and protective devices and schemes) identified in Exhibit B (Customer-Generator-Owned Generating Facility and Interconnection Facilities).

(2) The point of interconnection is shown on the single-line diagram and three-line diagram (provided by the Customer-Generator and reviewed by the Company) which are attached to Exhibit B (Customer-Generator-Owned Generating Facility and Interconnection Facilities). Pursuant to Company Rule 14H, Appendix I (Distributed Generating Facility Interconnection Standards Technical Requirements), Section 6.c (Review of Design Drawings), the Company must review and approve Customer-Generator's

single-line and three-line diagrams prior to Customer-Generator constructing of the Generating Facility interconnection.

(3) The Customer-Generator agrees to test the Generating Facility, to maintain operating records, and to follow such operating procedures, as may be specified by the Company to protect the Company's system from damages resulting from the parallel operation of the Generating Facility, including such testing, records and operating procedures as more fully described in Exhibit C attached hereto.

(4) The Company may inspect the Generating Facility and Customer-Generator's interconnection facilities.

(b) Company-Owned Interconnection Facilities (for Generating Facilities Larger than 30 kW or with three-phase electrical service).

(1) The Company agrees to furnish, install, operate and maintain such interconnection facilities on its side of the point of interconnection with the Generating Facility as required for the parallel operation with the Generating Facility and more fully described in Exhibit C (Company-Owned Interconnection Facilities) attached hereto and made apart hereof ("Company Interconnection Facilities"). All Company Interconnection Facilities shall be the property of the Company. Where portions of the Company Interconnection Facilities are located on the Customer-Generator's premises, the Customer-Generator shall provide, at no expense to the Company, a suitable location for and access to all such equipment. If a 120/240 Volt power source or sources are required, the Customer shall provide these at no expense to the Company.

(2) The Customer-Generator agrees to pay to the Company: (1) a non-refundable contribution for the Company's investment in the Company Interconnection Facilities described in Exhibit C (Company-Owned Interconnection Facilities), subject to the terms and conditions included in Exhibit C and to pay for other interconnection costs. The interconnection costs will not include the cost of an initial technical screening of the impact of the Generating Facility on the Company's system.

11. **Indemnification:**

(a) The Customer-Generator shall indemnify, defend and hold harmless the Company and its officers, directors, agents and employees, from and against all liabilities, damages, losses, fines, penalties, claims, demands, suits, costs and expenses (including reasonable attorney's fees and expenses) to or by third persons, including the Company's employees or subcontractors, for injury or death, or for injury to property, arising out of the actions or inactions of the Customer-Generator (or those of anyone under its control or on its behalf) with respect to its obligations under this Agreement, and/or arising out of the installation, operation and maintenance of the Generating Facility and/or the Customer-

Generator Interconnection Facilities, except to the extent that such injury, death or damage is attributable to the gross negligence or intentional act or omission of the Company or its officers, directors, agents or employees.

(b) The Owner/Operator shall indemnify, defend and hold harmless the Company and its officers, directors, agents and employees, from and against all liabilities, damages, losses, fines, penalties, claims, demands, suits, costs and expenses (including reasonable attorney's fees and expenses) to or by third persons, including the Company's employees or subcontractors, for injury or death, or for injury to property, arising out of the actions or inactions of the Owner/Operator (or those of anyone under its control or on its behalf) with respect to its obligations under this Agreement, and/or arising out of the installation, operation and maintenance of the Generating Facility and/or the Interconnection Facilities, except to the extent that such injury, death or damage is attributable to the gross negligence or intentional act or omission of the Company or its officers, directors, agents or employees.

Provided, however, where the Customer-Generator is an agency of the United States, the following Section shall be applicable in place of Paragraphs 11(a) and (b):

"The United States understands that it may be held liable for loss, damages expense and liability to third persons and injury to or death of persons or injury to property caused by the United States in its engineering design, construction ownership or operations of, or the making of replacements, additions betterment to, or by failure of, any of such party's works or facilities used in connection with this Agreement to the extent allowed by the Federal Tort Claims Act 28 U.S.C. § 2671 et seq. and the Agreement Disputes Act of 1978, 41 U.S.C. §§ 601-613.

Company shall be responsible for damages or injury caused by Company, Company's agents, officers, and employees in the course of their employment to the extent permitted by law."

Provided, however, where the Customer-Generator is an agency of the State of Hawaii (the "State"), the following Section shall be applicable in place of Paragraphs 11(a) and (b):

"The State shall be responsible for damages or injury caused by the State's agents, officers, and employees in the course of their employment to the extent that the State's liability for such damage or injury has been determined by a court or otherwise agreed to by the State. The State shall pay for such damage and injury to the extent permitted by law. The State shall use reasonable good faith efforts to pursue any approvals from the Legislature and the Governor that may be required to obtain the funding necessary to enable the State to perform its obligations or cover its liabilities hereunder. The State shall not request Company to indemnify the State for, or hold the State harmless from, any claims for such damages or injury.

(c) Company shall be responsible for damages or injury caused by Company, Company's agents, officers, and employees in the course of their employment to the extent that

Company's liability for such damage or injury has been determined by a court or otherwise agreed to by Company, and Company shall pay for such damage and injury to the extent permitted by law. Company shall not request the State to indemnify Company for, or hold Company harmless from, any claims for such damages or injury."

(d) The Company shall indemnify, defend and hold harmless the Customer-Generator, and its officers, directors, agents and employees, from and against all liabilities, damages, losses, fines, penalties, claims, demands, suits, costs and expenses (including reasonable attorney's fees and expenses) to or by third persons, including the Customer-Generator's employees or subcontractors, for injury or death, or for injury to property, arising out of the actions or inactions of the Company (or those of anyone under its control or on its behalf) with respect to its obligations under this Agreement, and/or arising out of the installation, operation and maintenance of the Company Interconnection Facilities, except to the extent that such injury, death or damage is attributable to the gross negligence or intentional act or omission of the Customer-Generator or its officers, directors, agents or employees.

(e) Nothing in this Agreement shall create any duty to, any standard of care with reference to, or any liability to any person not a party to it.

12. **Continuity of Service**.

(a) The Company may require the Seller to temporarily curtail, interrupt or reduce deliveries of energy when necessary in order for the Company to construct, install, maintain, repair, replace, remove, investigate, test or inspect any of its equipment or any part of the Company System including, but not limited to, accommodating the installation and/or testing of non-utility owned facilities to the Company system; or if the Company determines that such curtailment, interruption or reduction is necessary because of a system emergency, forced outage, operating conditions on its system; or the inability to accept deliveries of energy due to excess energy conditions; or if either the Generating Facility does not operate in compliance with good engineering and operating practices or acceptance of energy from the Seller by the Company would require the Company to operate the Company system outside of good engineering and operating practices which in this case shall include, but not be limited to, excessive system frequency fluctuations or excessive voltage deviations, and any situation that the Company system operator determines, at his or her sole discretion, could place in jeopardy system reliability.

(b) In the event that the Company temporarily curtails, interrupts, or reduces deliveries of energy pursuant to Section 12(a), the Company shall not be obligated to accept or apply credit for any energy from the Seller except for such energy that the Company notifies the Seller that it is able to take during this period. The Company shall take all reasonable steps to minimize the number and duration of interruptions, curtailments or reductions. Whenever feasible, Company shall give Seller reasonable notice of the possibility that interruption or reduction of deliveries may be required.

(c) In the event that the Company temporarily curtails or interrupts deliveries of energy from the Generating Facility pursuant to this Section 12, the Generating Facility shall not energize a de-energized utility line under any circumstances, but may operate the Generating Facility isolated from the utility system with an open tie point in accordance with Section 4.1 of Appendix I to Rule 14H.

13. **Personnel and System Safety**. If at any time the Company determines that the continued operation of the Generating Facility may endanger any person or property, the Company's electric system, or have an adverse effect on the safety or power quality of other customers, the Company shall have the right to disconnect the Generating Facility from the Company's electric system remotely or otherwise. The Generating Facility shall remain disconnected until such time as the Company is satisfied that the endangering or power quality condition(s) has been corrected, and the Company shall not be obligated to accept any energy from the Generating Facility during such period. The Company shall not be liable, directly or indirectly, for permitting or continuing to allow an attachment of the Generating Facility for the acts or omissions of the Customer-Generator that cause loss or injury, including death, to any third party.

14. **Prevention of Interference**. The Customer-Generator shall not operate equipment that superimposes a voltage or current upon the Company's system that interferes with the Company's operations, service to the Company's customers, or the Company's communication facilities. Such interference shall include, but not be limited to, overcurrent, voltage imbalance, and abnormal waveforms. If such interference occurs, the Customer-Generator must diligently pursue and take corrective action at its own expense after being given notice and reasonable time to do so by the Company. If the Customer-Generator does not take timely corrective action, or continues to operate the equipment causing interference without restriction or limit, the Company may, without liability, disconnect the Customer-Generator's equipment from the Company's system.

15. **Limitation of Liability**. Neither by inspection, if any, or non-rejection, nor in any other way, does the Company give any warranty, express or implied, as to the adequacy, safety, or other characteristics of any structures, equipment, wires, appliances or devices owned, installed or maintained by the Customer-Generator or leased by the Customer-Generator from third parties, including without limitation the Generating Facility and any structures, equipment, wires, appliances or devices appurtenant thereto.

16. **Customer-Generator and Generating Facility Information.** By signing this Agreement, the Customer-Generator expressly agrees and authorizes the Company to: (1) request and obtain from Customer-Generator and its contractors, vendors, subcontractors, installers, suppliers or agents (collectively "Customer-Generator Agents"), at no cost to Company, information related to the Generating Facility, including but not limited to Watts, Vars, Watt Hours, current and voltage, status of the generating facility, inverter settings, any and all recorded event or alarm logs recorded, (collectively "Generating Facility Data") that Company reasonably determines are needed to ensure the safe and reliable operation of the Generating Facility or the Company's

system; or (2) make such modifications to the Customer-Generator's system, at no cost to the Company, that Company determines, in its reasonable discretion, are needed to ensure the safe and reliable operation of the Generating Facility or the Company's system. Customer-Generator expressly agrees and irrevocably authorizes Customer-Generator Agents to disclose such Customer-Generator Data to Company and to make such modifications to the Customer-Generator's Generating Facility upon request by Company.

17. **Additional Information**. The Company reserves the right to request additional information from Customer-Generator relating to the Generating Facility, where reasonably necessary, to serve the Customer-Generator under this Agreement or to ensure reliability, safety of operation, and power quality of the Company's system.

18. **No Material Changes to Generating Facility**. The Customer-Generator agrees that no material changes or additions to the Generating Facility shall be made without having obtained prior written consent from the Company, which consent shall not be unreasonably withheld. In no event may the Total Rated Capacity of the Generating Facility exceed 100 kW. If a Generating Facility changes ownership, the Company may require the new Customer-Generator and/or Owner/Operator to complete and execute an amended Agreement or new Agreement, as may be applicable.

19. **Notices**. Any notice required under this Agreement shall be in writing and mailed at any United States Post Office with postage prepaid and addressed to the Party, or personally delivered to the Party at the address identified on the last page of the Agreement. Changes in such designation may be made by notice similarly given. Notice sent by mail shall be deemed to have been given on the date of actual delivery or at the expiration of the fifth day after the date of mailing, whichever is earlier.

20. **Certification by Licensed Electrical Contractor**. Generating and interconnection systems must comply with all applicable safety and performance standards of the National Electrical Code (NEC), Institute of Electrical and Electronic Engineers (IEEE), and accredited testing laboratories such as the Underwriters Laboratories (UL), and where applicable, the rules of the Commission, or other applicable governmental laws and regulations, and the Company's interconnection requirements, in effect at the time of signing this agreement. This requirement shall include, but not be limited to, the interconnection provisions of the Company's Rule 14H, as authorized by the Commission. Upon request by Company, Customer-Generator shall cause a Licensed Electrical Contractor, as agent for Customer-Generator, to certify that once approved by the Company, the proposed Generating Facility will be installed to meet all preceding requirement(s).

21. **Force Majeure**. For purposes of this Agreement, "Force Majeure Event" means any event: (a) that is beyond the reasonable control of the affected party; and (b) that the affected party is unable to prevent or provide against by exercising reasonable diligence, including the following events or circumstances, but only to the extent they satisfy the preceding requirements: (a) acts of war, public disorder, insurrection or rebellion; floods, hurricanes, earthquakes, lighting,

storms, and other natural calamities; explosions or fires; strikes, work stoppages, or labor disputes; embargoes ; and sabotage. If a Force Majeure Event prevents a party from fulfilling any obligations under this Agreement, such party will promptly notify the other party in writing, and will keep the other party informed on a continuing basis of the scope and duration of the Force Majeure Event. The affected party will specify in reasonable detail the circumstances of the Force Majeure Event, its expected duration, and the steps that the affected party is taking to mitigate the effects of the event on its performance. The affected part will be entitled to suspend or modify its performance of obligations under this Agreement, other than the obligation to make payments then due or becoming due under this Agreement, but only to the extent that the effect of the Force Majeure Event cannot be mitigated by the use of reasonable efforts. The affected party will use reasonable efforts to resume its performance as soon as possible.

22. **Good Engineering Practice**.

(a) Each party agrees to install, operate and maintain its respective equipment and facilities and to perform all obligations required to be performed by such party under this Agreement in accordance with good engineering practice in the electric industry and with applicable laws, rules, orders and tariffs.

(b) Wherever in this Agreement and the attached Exhibits the Company has the right to give specifications, determinations or approvals, such specifications, determinations and/or approvals shall be given in accordance with the Company's standard practices, policies and procedures, which may include the Company's Electric Service Installation Manual, the Company's Engineering Standard Practice Manual and the IEEE Guides and Standards for Protective Relaying Systems.

23. **Insurance**. The following insurance provisions are only applicable to Generating Facilities with a Total Rated Capacity greater than 10 kW but not exceeding 100 kW:

The Customer-Generator shall, at its own expense and during the term of the Agreement and any other time that the Generating Facility is interconnected with the Company's system, maintain in effect with a responsible insurance company authorized to do insurance business in Hawaii, the following insurance or its equivalent at Company's discretion that will protect the Customer-Generator and the Company with respect to the Generating Facility, the Generating Facility's operations, and the Generating Facility's interconnection with the Company's system:

A commercial general liability policy, covering bodily injury and property damage combined single limit of at least the following amounts based on the Total Rated Capacity of the generator (for solar systems—Total Rated Capacity of the generator or inverter, whichever is lower, can be used with appropriate technical documentation on inverter, if not higher Total Rated Capacity will be used), for any occurrence.

Commercial General Liability Coverage Amount	Total Rated Capacity of the Generating Facility
$1,000,000	Greater than 30 kW and less than or equal to 100 kW
$500,000	Greater than 10 kW and less than or equal to 30 kW

The Customer-Generator has responsibility to determine if higher limits are desired and purchased. Said insurance shall name the Company, its directors, officers, agents, and employees as additional insureds, shall include contractual liability coverage for written Agreements and agreements including this Agreement, and shall include provisions stating that the insurance will respond to claims or suits by additional insureds against the Customer-Generator or any other insured thereunder. Customer-Generator shall immediately provide written notice to the Company should the required insurance be cancelled, limited in scope, or not renewed upon expiration. "Claims made" policies are not acceptable, unless the Customer-Generator agrees to maintain coverage in full effect at all times during the term of this Agreement and for THREE (3) years thereafter. The adequacy of the coverage afforded by the required insurance shall be subject to review by the Company from time to time, and if it appears in such review that risk exposures require an increase in the coverages and/or limits of this insurance, the Customer-Generator shall make such increase to that extent and any increased costs shall be borne by the Customer-Generator. The insurance required hereunder shall provide that it is primary with respect to the Customer-Generator and the Company. The Customer-Generator shall provide evidence of such insurance, including insurer's acknowledgement that coverage applies with respect to this Agreement, by providing certificates of insurance to the Company within 30 days of any change. Initially, certificates of insurance must be provided to the Company prior to executing the Agreement and any parallel interconnection. The Customer-Generator's indemnity and other obligations shall not be limited by the foregoing insurance requirements. Any deductible shall be the responsibility of the Customer-Generator.

Alternatively, where the Customer-Generator is a governmental entity, Customer Generator may elect to be self-insured for the amounts set forth above in lieu of obtaining insurance coverage to those levels from an insurance company.

24. **Miscellaneous.**

(a) **Disconnection and Survival of Obligations.** Upon termination of this Agreement, the Generating Facility shall be disconnected from the Company's system. The termination of this Agreement shall not relieve the Parties of their respective liabilities and obligations, owed or continuing at the time of termination.

(b) **Governing Law and Regulatory Authority.** This Agreement was executed in the State of Hawaii and must in all respects be interpreted, governed, and construed under the laws of the State of Hawaii. This Agreement is subject to, and the parties' obligations hereunder include, operating in full compliance with all valid, applicable federal, state,

and local laws or ordinances, and all applicable rules, regulations, orders of, and tariffs approved by, duly constituted regulatory authorities having jurisdiction.

(c) **Amendment, Modifications, or Waiver**. This Agreement may not be altered or modified by either of the Parties, except by an instrument in writing executed by each of them. None of the provisions of this Agreement shall be considered waived by a Party unless such waiver is given in writing. The failure of a Party to insist in any one or more instances upon strict performance of any of the provisions of this Agreement or to take advantage of any of its rights hereunder shall not be construed as a waiver of any such provisions or the relinquishment of any such rights for the future, but the same shall continue and remain in full force and effect. This Agreement contains the entire agreement and understanding between the Parties, their agents, and employees as to the subject matter of this Agreement. Each party also represents that in entering into this Agreement, it has not relied on any promise, inducement, representation, warranty, agreement or other statement not set forth in this Agreement.

(d) **Termination of Existing Agreement**. This Agreement shall supersede any existing agreement, if any, under which Customer-Generator is currently operating the Generating Facility and any such agreement shall be deemed terminated as of the date this Agreement becomes effective.

(e) **Assignment.** This Agreement may not be assigned by either Party without the prior written consent of the other party. Such consent shall not be unreasonably withheld.

(f) **Binding Effect.** This Agreement shall be binding upon and inure to the benefit of the parties hereto and their respective successors, legal representatives, and permitted assigns.

(g) **Relationship of Parties**. Nothing in this Agreement shall be deemed to constitute any Party hereto as partner, agent or representative of the other party or to create any fiduciary relationship between the Parties.

(h) **Limitations**. Nothing in this Agreement shall limit the Company's ability to exercise its rights or expand or diminish its liability with respect to the provision of electrical service pursuant to the Company's tariffs as filed with the Commission, or the Commission's Standards for Electric Utility Service in the State of Hawaii, which currently are included in the Commission's General Order Number 7, as either may be amended from time to time.

(i) **Execution of Agreement; Multiple Counterparts**. This Agreement may be executed in two or more counterparts, each of which is deemed an original but all constitute one and the same instrument binding all Parties notwithstanding that all of the Parties are not signatories to the same counterparts. Signatures may be provided in original ("wet") form or by other means intended to preserve the original graphic and pictorial appearance of the signature, such as as photocopy. A copy of a Party's signature shall be considered an "original" signature for purposes of this Agreement.

HAWAIIAN ELECTRIC COMPANY, INC.

25. **Generator/Equipment Certification**

Generating Facilities that utilize inverter technology must be compliant with *Institute of Electrical and Electronics Engineers IEEE Std 1547* and *Underwriters Laboratories UL 1703* and *UL 1741* in effect at the time this Agreement is executed. Generating systems that use a rotating machine must be compliant with applicable National Electrical Code, Underwriters Laboratories, and Institute of Electrical and Electronics Engineers standards and rules and orders of the Public Utilities Commission of the State of Hawaii in effect at the time this Agreement is executed. By signing below, the Applicant certifies that the installed generating equipment will meet the appropriate preceding requirement(s) and can supply documentation that confirms compliance, including a certification of the same from the Installing Electrical Contractor upon request by the Company.

IN WITNESS WHEREOF, the Parties hereto have caused two originals of this Agreement to be executed by their duly authorized representatives. This Agreement is effective as of the date first set forth above.

CUSTOMER-GENERATOR

By: _____ _____
Signature Date

Name (Print): _____

Company Name
(if applicable): _____

Title (if applicable): _____

OWNER/OPERATOR
(if different from Customer-Generator) ☐ Not Applicable

By: _____ _____
Signature Date

Name (Print): _____

Company Name
(if applicable): _____

Title (if applicable): _____

HAWAIIAN ELECTRIC COMPANY

By: To be filled out by the Company To be filled out by the Company
Signature Date

Name (Print): To be filled out by the Company

Title: To be filled out by the Company

MAILING ADDRESS

Hawaiian Electric Company
Distributed Energy Resources Division
P.O. Box 2750
Honolulu, HI 96840

Superseding Sheet No. 46A-15
Effective October 21, 2015

REVISED SHEET NO. 46A-15
Effective June 13, 2016

EXHIBIT A

DESCRIPTION OF GENERATING FACILITY

Under no circumstances shall a Customer-Generator interconnect and operate a generating facility in parallel with the Company's electric system without prior written approval by the Company in the form of a fully executed Agreement. Generating facilities that incorporate the use of an energy storage device, e.g. battery storage, regardless of whether such energy storage device is intended to operate in parallel with the Company's transmission and/or distribution facilities, shall obtain an interconnection review by the Company pursuant to this Agreement. Energy storage systems that are intended to be installed by an Eligible Customer-Generator after Company's execution of an Agreement shall constitute a material change and addition to a generating facility and shall require interconnection review pursuant to this Rule prior to installation.

1. Customer-Generator Information

Name (print): _____

Property Address: _____

City: _____ State: _____ Zip: _____

Active Electric
Service Account #: _____ Meter #: _____ TMK: _____

Phone: _____ Cell: _____ Email: _____

☐ Mailing Address is the same as the Property Address

Mailing Address: _____

City: _____ State: _____ Zip: _____

2. Owner-Operator Information ☐ Not Applicable

Name (print): _____

Company:
(If applicable) _____

Mailing Address: _____

City: _____ State: _____ Zip: _____

Phone: _____ Cell: _____ Email: _____

3. Electrical Contractor

Electrical Contractor: _____ Hawai`i License #: _____

Superseding Sheet No. 46A-16
Effective October 21, 2015

REVISED SHEET NO. 46A-16
Effective June 13, 2016

Mailing Address: _____

City: _____ State: _____ Zip: _____

Phone: _____ Cell: _____ Email: _____

Supply certification that the generating system will be installed and inspected in compliance with the local Building/Electrical code of the County of: ☐ Honolulu ☐ Maui ☐ Hawai`i

Generating System Building Permit # (to be filled out by the Company upon the Company's approval and execution of Agreement): To be filled out by the Company

Interconnection Date (to be filled out by the Company upon the Company's approval and execution of the Agreement): To be filled out by the Company

4. Insurance ☐ Not Applicable (less than 10 kW)

Insurance Carrier: _____

5. General Technical Information (Attached)

☐ **Single Line Diagram** (if the Generating Facility is less than 30 kW) ☐ **Three Line Diagram** (if the Generating Facility's capacity is greater than or equal to 30 kW) ☐ **Relay List and Trip Scheme** (if applicable)

6. Generator Qualifications

Check all that apply (include Exhibit A-1 for all but Photovoltaic):

☐ Photovoltaic ☐ Wind Turbine ☐ Hydroelectric ☐ Biomass ☐ Hybrid (describe): _____

Generator Type:

☐ Photovoltaic with DC Inverter ☐ Non-Photovoltaic DC Generator (include Exhibit A-1) ☐ Synchronous (include Exhibit A-1) ☐ Induction (include Exhibit A-1)

☐ No ☐ Yes (include Exhibit A-1)

What is the system's Maximum Export capability?

☐ Less than 30 kW

Maximum Generating Capability: _____ kW Maximum Export: _____ kW

☐ Greater than or equal to 30 kW but less than or equal to 100 kW (include Exhibit A-1and Exhibit B)

Maximum Generating Capability: _____ kW Maximum Export: _____ kW

Maximum Site Load without Generation: _____ kW Minimum Site Load without Generation: _____ kW

7. Interconnecting Equipment Technical Data

Generator Disconnect Information:

Manufacturer: _____ Catalog #: _____

Superseding Sheet No. 46A-17
Effective October 21, 2015

REVISED SHEET NO. 46A-17
Effective June 13, 2016 _____

Type: _____ Rated Amps: _____ Rated Volts: _____

☐ Fused *or* ☐ Non-Fused | ☐ Single Phase *or* ☐ Three Phase (include Exhibit A-1) | ☐ Uses multiple disconnects

Mounting Location: _____

Will an interposing transformer be used between the generator and the point of interconnection?

☐ No ☐ Yes (include Exhibit A-1)

8. Generator Technical Information

Photovoltaic System Information:

Micro Inverter	Central/String Inverter	Inverter Manufacturer	Model	Qty.	Peak AC Output Rating (kW)*	Quantity x Peak AC Output Rating (kW)
☐ 1	☐ 1					
☐ 2	☐ 2					
☐ 3	☐ 3					
☐ 4	☐ 4					
☐ 5	☐ 5					
					Total Inverter Capacity (kW):	

Micro Inverter	Central/String Inverter	Module Manufacturer	Model	Qty.	STC Rating (kW)*	Quantity x STC Rating (kW)
☐ 1	☐ 1					
☐ 2	☐ 2					
☐ 3	☐ 3					
☐ 4	☐ 4					
☐ 5	☐ 5					
					Total Module Capacity (kW):	

Total Capacity of Inverter #:	1:	2:	3:	4:	5:
Total System Capacity (kW):					

Total System Capacity is the combined sums of the lesser of the AC or DC capacities per inverter.

*All equipment ratings must match those listed on their manufacturer's specification sheets.

Superseding Sheet No. 46A-18
Effective October 21, 2015

REVISED SHEET NO. 46A-18
Effective June 13, 2016

EXHIBIT A-1

DESCRIPTION OF GENERATING FACILITY – ADDITIONAL INFORMATION

[ADDITIONAL INFORMATION FOR GENERATING FACILITIES THAT: (1) INCLUDE AN ENERGY STORAGE SYSTEM; (2) INCLUDE NON-PHOTOVOLTAIC GENERATORS; OR (3) HAVE A TOTAL SYSTEM CAPACITY GREATER THAN 30 KW OR THREE-PHASE ELECTRICAL SERVICE]

1. Energy Storage System Information ☐ Not Applicable

Specification sheets must be provided for all equipment listed in the section below

Description of Energy Storage System Operations:

Manufacturer: _____ Model: _____

Size kW: _____ Max Capacity kWh: _____

Rated kW discharge: _____ Rated kW charge: _____

Will the energy storage system be used only as an Emergency Backup System?
☐ No ☐ Yes

Describe mode(s) of operation (e.g. charge and discharge timing; does the system match the load with PV and battery?)

_____

_____

Will the distribution grid be used to charge the storage device?
☐ No ☐ Yes, charging periods: _____

Will power be exported to the grid?
☐ No ☐ Yes, maximum export to the grid: _____

2. Wind Generator System Information ☐ Not Applicable

Specification sheets must be provided for all equipment listed in the section below

DC Generator Manufacturer	Model	Qty.	Rating (kW)	Quantity x Rating (kW)
			Total DC Generator Capacity (kW):	
Inverter Manufacturer	Model	Qty.	Rating (kW)	Quantity x Rating (kW)
			Total Inverter Capacity (kW):	
			Total System Capacity (kW):	
			Fault Current Contribution of Generator (Amps):	

3. Technical Information for Synchronous and Induction Generators ☐ Not Applicable

Specification sheets must be provided for all equipment referenced in the section below

Number of starts per day: _____ Maximum Starting kVA: _____ Generator Operating Power Factor: _____

Superseding Sheet No. 46A-19
Effective October 21, 2015

REVISED SHEET NO. 46A-19
Effective June 13, 2016

☐ Effectively Grounded ☐ Resonant Grounded ☐ Low-Inductance Grounded ☐ Low-Resistance Grounded ☐ High-Resistance Grounded ☐ Ungrounded

Generator Characteristic Data*:

* Not needed if Generator Nameplate and Manufacturer's Specification Sheet are provided.

Direct Axis Synchronous Reactance, X_d: _____ P.U. Direct Axis Transient Reactance, X'_d: _____ P.U.

Direct Axis Subtransient Reactance, X''_d: _____ P.U. Inertia Constant, H: _____ P.U. Excitation Response Ratio: _____

Direct Axis Open-Circuit Transient Time Constant, X_d: _____ Seconds Direct Axis Open-Circuit Subtransient Time Constant, T"do: _____ Seconds

4. Interconnecting Equipment Technical Data

Transformer Data ☐ Not Applicable

A copy of transformer Nameplate and Manufacturer's Test Report may be substituted

Transformer Primary (Volts): _____ Transformer Secondary (Volts): _____

☐ Delta ☐ Wye ☐ Wye Grounded ☐ Delta ☐ Wye ☐ Wye Grounded

Size: _____ KVA Transformer Impedance: _____ % on _____ KVA Base

Transformer Fuse Data ☐ Not Applicable

Attach fuse manufacturer's Minimum Melt & Total Clearing Time-Current Curves

☐ At Primary Voltage ☐ At Secondary Voltage

Manufacturer: _____ Type: _____ Size: _____ Speed: _____

Transformer Protection (if not fuse) ☐ Not Applicable

Please describe: _____

Generator Main Circuit Breaker ☐ Not Applicable

A copy of circuit breaker's Nameplate and Specification Sheet may be substituted

Manufacturer: _____ Type: _____

Continuous Load Rating (Amps): _____ Interrupting Rating (Amps): _____ Trip Speed (Cycles): _____

Feeder Circuit Breaker ☐ Not Applicable

Attach copy of any proposed Time-Overcurrent Coordination Curves

Manufacturer	Type	Style/Catalog No.	Proposed Setting

Current Transformer Data ☐ Not Applicable

Attach copy of Manufacturer's Excitation & Ratio Correction Curves

Manufacturer	Type	Accuracy Class	Proposed Ration Connection
			/5
			/5
			/5
			/5
			/5

EXHIBIT B

CUSTOMER-GENERATOR-OWNED GENERATING FACILITY AND INTERCONNECTION FACILITIES

[THIS EXHIBIT IS ONLY APPLICABLE TO GENERATING FACILITIES EQUAL TO OR GREATER THAN 30 kW OR WITH THREE-PHASE ELECTRICAL SERVICE. DO NOT INCLUDE THIS EXHIBIT IF NOT APPLICABLE.]

1. Generating Facility

a. Compliance with laws and standards. The Generating Facility, Generating Facility design, and Generating Facility drawings shall meet all applicable national, state, and local laws, rules, regulations, orders, construction and safety codes, and shall satisfy the Company's Distributed Generating Facility Interconnection Standards, Technical Requirements ("Interconnection Standards"), as set forth in Rule 14, Paragraph H.1 of the Company's tariff.

b. Avoidance of adverse system conditions. The Generating Facility shall be designed, installed, operated and maintained so as to prevent or protect against adverse conditions on the Company's system that can cause electric service degradation, equipment damage, or harm to persons, such as:

- Unintended islanding.
- Inadvertent and unwanted re-energization of a Company dead line or bus.
- Interconnection while out of synchronization.
- Overcurrent.
- Voltage imbalance.
- Ground faults.
- Generated alternating current frequency outside of permitted safe limits.
- Voltage outside permitted limits.
- Poor power factor or reactive power outside permitted limits.
- Abnormal waveforms.

c. Specification of protection, synchronizing and control requirements. The Customer-Generator shall provide the design drawings, operating manuals, manufacturer's brochures/instruction manual and technical specifications, manufacturer's test reports, bill of material, protection and synchronizing relays and settings, and protection, synchronizing, and control schemes for the Generating Facility to the Company for its review, and the Company shall have the right to specify the protection and synchronizing relays and settings, and protection, synchronizing and control schemes that affect the reliability and safety of operation and power quality of the Company's system with which the Generating Facility is interconnected ("Facility Protection Devices/Schemes").

d. **Generating Facility protection**. The Customer-Generator is solely responsible for providing adequate protection for the Generating Facility.

e. **Customer-Generator Interconnection Facilities**.

(i) The Customer-Generator shall furnish, install, operate and maintain interconnection facilities (such as circuit breakers, relays, switches, synchronizing equipment, monitoring equipment, and control and protective devices and schemes) designated by or acceptable to the Company as suitable for parallel operation of the Generating Facility with the Company's system ("Customer-Generator Interconnection Facilities"). Such facilities shall be accessible at all times to authorized Company personnel.

(ii) The Customer-Generator shall comply with the Company's Interconnection Standards.

(iii) 1) Single-line diagram of the Generating Facility, 2) relay list, trip scheme and settings of the Generating Facility, 3) Generating Facility Equipment List, and 4) three-line diagram (if the Generating Facility's capacity is greater than or equal to 30 kW), which identify the circuit breakers, relays, switches, synchronizing equipment, monitoring equipment, and control and protective devices and schemes, shall, after having obtained prior written consent from the Company, be attached to Exhibit A and made a part hereof at the time the Agreement is signed. The single-line diagram shall include pertinent information regarding operation, protection, synchronizing, control, monitoring, and alarm requirements. The single-line diagram and three-line diagram shall expressly identify the point of interconnection of the Generating Facility to the Company's system. The relay list, trip scheme and settings shall include all protection, synchronizing and auxiliary relays that are required to operate the Generating Facility in a safe and reliable manner. The three-line diagram shall show potential transformer and current transformer ratios, and details of the Generating Facility's configuration, including relays, meters, and test switches.

f. **Approval of Design Drawings**. If the Generating Facility's capacity is greater than or equal to 30 kW, the single-line diagram, relay list, trip scheme and settings of the Generating Facility, and three-line diagram shall be approved by a Professional Electrical Engineer registered in the State of Hawaii prior to being submitted to the Company. Such approval shall be indicated by the engineer's professional seal on all drawings and documents.

2. Verification Testing.

a. Upon initial parallel operation of the Generating Facility, or any time interface hardware or software is changed, a verification test shall be performed. A licensed professional engineer or otherwise qualified individual shall perform verification testing in accordance with the manufacturer's published test procedure. Qualified individuals include professional engineers, factory trained and certified technicians, and licensed electricians with experience in testing protective equipment. The Company reserves the right to witness verification testing or require written certification that the testing was performed.

b. Verification testing shall also be performed every four years. The Company reserves the right to perform, at its expense, additional verification testing. All verification tests prescribed by the manufacturer shall be performed. If wires must be removed to perform certain tests, each wire and each terminal shall be clearly and permanently marked. The Customer-Generator shall maintain verification test reports for inspection by the Company.

c. Inverters shall be verified once per year as follows: once per year the Customer-Generator shall operate the customer generator system disconnect switch and verify the Generating Facility automatically shuts down and does not reconnect with the Company's system until the Company's system continuous normal voltage and frequency have been maintained for a minimum of 5 minutes. The Customer-Generator shall maintain a log of these operations for inspection by the Company.

d. Any system that depends upon a battery for trip power shall be checked once per month for proper voltage. Once every four (4) years the battery shall either be replaced or have a discharge test performed. The Customer-Generator shall maintain a log of these operations for inspection by the Company.

e. Tests and battery replacements as specified in this section 2 of Exhibit B shall be at the Customer-Generator's expense.

3. <u>Inspection of the Generating Facility</u>.

a. The Company may, in its discretion and upon reasonable notice not to be less than 24 hours (unless otherwise agreed to by the Company and the Customer-Generator), observe the construction of the Generating Facility (including but not limited to relay settings and trip schemes) and the equipment to be installed therein.

b. Within fourteen days after receiving a written request from the Customer-Generator to begin producing electric energy in parallel with the Company's system, the Company may inspect the Generating Facility (including but not limited to relay settings and trip schemes) and observe the performance of the verification testing. The Company may accept or reject the request to begin producing electric energy based upon the inspection or verification test results.

c. If the Company does not perform an inspection of the Generating Facility (including but not limited to relay settings and trip schemes) and observe the performance of verification testing within the fourteen-day period, the Customer-Generator may begin to produce energy after certifying to the Company that the Generating Facility has been tested in accordance with the verification testing requirements and has successfully completed such tests. After receiving the certification, the Company may conduct an inspection of the Generating Facility (including but not limited to relay settings and trip schemes) and make reasonable inquiries of the Customer-Generator, but only for purposes of determining whether the verification tests were properly performed. The Customer-Generator shall not be required to perform the verification tests a second time,

unless irregularities appear in the verification test report or there are other objective indications that the tests were not properly performed in the first instance.

d. The Company may, in its discretion and upon reasonable notice not to be less than 24 hours (unless an apparent safety or emergency situation exists which requires immediate inspection to resolve a known or suspected problem), inspect the Generating Facility (including but not limited to relay settings and trip schemes) and its operations (including but not limited to the operation of control, synchronizing, and protection schemes) after the Generating Facility commences operations.

4. <u>Operating Records and Procedures</u>.

a. The Company may require periodic reviews of the maintenance records, and available operating procedures and policies of the Generating Facility.

b. The Customer-Generator must separate the Generating Facility from the Company's system whenever requested to do so by the Company's System Operator pursuant to this Agreement. It is understood and agreed that at times it may not be possible for the Company to accept electric energy due to temporary operating conditions on the Company's system, and these periods shall be specified by the Company's System Operator. Notice shall be given in advance when these are scheduled operating conditions.

c. Logs shall be kept by the Customer-Generator for information on unit availability including reasons for planned and forced outages; circuit breaker trip operations, relay operations, including target initiation and other unusual events. The Company shall have the right to review these logs, especially in analyzing system disturbance.

5. <u>Changes to the Generating Facility, Operating Records, and Operating Procedures</u>.

a. The Customer-Generator agrees that no material changes or additions to the Generating Facility as reflected in the single-line diagram, relay list, trip scheme and settings of the Generating Facility, Generating Facility Equipment List, and three-line diagram (if the Generating Facility’s capacity is greater than or equal to 30 kW), shall be made without having obtained prior written consent from the Company, which consent shall not be unreasonably withheld.

b. As a result of the observations and inspections of the Generating Facility (including but not limited to relay list, trip scheme and settings) and the performance of the verification tests, if any changes in or additions to the Generating Facility, operating records, and operating procedures and policies are required by the Company, the Company shall specify such changes or additions to the Customer-Generator in writing, and the Customer-Generator shall, as soon as practicable, but in no event later than thirty (30) days after receipt of such changes or additions, respond in writing, either noting agreement and action to be taken or reasons for disagreement. If the Customer-Generator disagrees with the Company, it shall note alternatives it will take to accomplish the same

intent, or provide the Company with a reasonable explanation as to why no action is required by good engineering practice.

6. <u>Generating Facility Equipment List</u>.

The Generating Facility shall include the following equipment:

[Specific items to be attached as necessary. The Generating Facility Equipment List, together with the single-line diagram, relay list and trip scheme, and three-line diagram (if the Generating Facility's capacity is greater than or equal to 30 kW), should be attached to this Exhibit B.]

EXHIBIT C

COMPANY-OWNED INTERCONNECTION FACILITIES

(To be filled out by Company)

1. Description of Company Interconnection Facilities

The Company will purchase, construct, own, operate and maintain all interconnection facilities required to interconnect the Company's system with the Generating Facility at ___ volts, up to the point of interconnection.

The Company Interconnection Facilities, for which the Customer-Generator agrees to pay, include:

[Need to specify the interconnection facilities. If no interconnection facilities, state "None".]

2. Customer-Generator Payment to Company for Company Interconnection Facilities, Review of Generating Facility, and Review of Verification Testing

The Customer-Generator shall pay to the Company the total estimated interconnection cost to be incurred by the Company (Total Estimated Interconnection Cost), which is comprised of (i) the estimated cost of the Company Interconnection Facilities, (ii) the estimated engineering costs associated with a) developing the Company Interconnection Facilities and b) reviewing and specifying those portions of the Generating Facility which allow interconnected operation, and iii) witnessing and reviewing the verification testing. The following summarizes the Total Estimated Interconnection Cost:

Description	**Estimated Cost ($)** [If no cost, state "None".]
Total Estimated Interconnection Cost ($):	

The Total Estimated Interconnection Cost, which, except as otherwise provided herein, is non-refundable, shall be paid by the Customer-Generator fourteen (14) days after receipt of an invoice from the Company, which shall be provided not less than thirty (30) days prior to start of procurement of the Company Interconnection Facilities.

Within thirty (30) days of receipt of an invoice, which shall be provided within fourteen (14) days of the final accounting, which shall take place within sixty (60) days of completion of construction of the Company Interconnection Facilities, the Customer-Generator shall remit to the Company the difference between the Total Estimated Interconnection Cost paid to date and the total actual interconnection cost (Total Actual Interconnection Cost). The latter is comprised of (i) the total costs of the Company Interconnection Facilities, and (ii) the total engineering costs associated with a) developing the Company Interconnection Facilities and b) reviewing and specifying those portions of the Generating Facility which allow interconnected operations as

such are described in Exhibit A, and iii) reviewing the verification testing. If in fact the Total Actual Interconnection Cost is less than the payments received by the Company as the Total Estimated Interconnection Cost, the Company shall repay the difference to the Customer-Generator within thirty (30) days of the final accounting.

If the Agreement is terminated prior to the Customer-Generator's payment for the Total Actual Interconnection Cost (or the portion of this cost which has been incurred) or prior to the Company's repayment of the over collected amount of the Total Estimated Interconnection Cost (or the portion of this cost which has been paid), such payments shall be made by the Customer-Generator or Company, as appropriate. If payment is due to the Company, the Customer-Generator shall pay within thirty (30) days of receipt of an invoice, which shall be provided within fourteen (14) days of the final accounting, which shall take place within sixty (60) days of the date the Agreement is terminated. If payment is due to the Customer-Generator, the Company shall pay within thirty (30) days of the final accounting.

All Company Interconnection Facilities shall be the property of the Company.

3. <u>Operation, Maintenance and Testing Costs</u>

The Company will bill the Customer-Generator monthly and the Customer-Generator will, within 30 days after the billing date, reimburse the Company for any costs incurred in operating, maintaining or testing the Company Interconnection Facilities. The Company's costs will be determined on the basis of outside service costs, direct labor costs, material costs, transportation costs, applicable overheads at time incurred and applicable taxes. Applicable overheads will include such costs as vacation, payroll taxes, non-productive wages, supervision, tools expense, employee benefits, engineering administration, corporate administration, and materials handling. Applicable taxes will include the Public Service Company Tax, and Public Utility Fee.

SHEET NO. 47
Effective February 20, 2018
Proposed Changes: January 17, 2021

Rule No. 24

CUSTOMER GRID SUPPLY PLUS

A. AVAILABILITY FOR CUSTOMER-GENERATORS

Customer Grid-Supply Plus service is available to Eligible Customer-Generators who own or lease from a third party and operate or contract to operate with a third party a solar, wind turbine, biomass, or hydroelectric energy generating facility, or a hybrid system consisting of two or more of these facilities ("Generating Facility"), with a capacity of not more than one hundred kilowatts (100 kW) and where:

1. The Generating Facility which may include an energy storage system, is located on the Eligible Customer-Generator's premises,

2. The Generating Facility will be operated in parallel with the Company's transmission and distribution facilities,

3. The Generating Facility is in conformance with the Company's interconnection requirements provided in Rule No. 14, Paragraph H, the requirements of this tariff and the Grid Supply Plus Interconnection Agreement, and

4. The Generating Facility is sized and designed such that all of the Generating Facility's output is intended to offset all or part of the Eligible Customer-Generator's own electrical requirements ("Host Load").

B. GRID SUPPLY INTERCONNECTION AGREEMENT

1. Eligible Customer-Generator shall complete and sign an application for service and a standard Grid-Supply Plus Interconnection Agreement (100 kW or less) provided as Appendix I of this Rule ("Interconnection Agreement"), to receive service under this tariff. Where the Eligible Customer-Generator is not the person or entity in whose name electric service is rendered for the Eligible Customer-Generator's premises where the Generating Facility is located, i.e. where a landlord-tenant relationship exists, only the Eligible Customer-Generator shall be required to complete and sign the application for service and the Interconnection Agreement.

Rule No. 24

CUSTOMER GRID SUPPLY PLUS – Continued

2. The Eligible Customer-Generator's Generating Facility and interconnection systems must be in compliance with all applicable safety and performance standards of the National Electric Code (NEC), the Institute of Electrical and Electronic Engineers (IEEE), accredited testing laboratories such as Underwriters Laboratories (UL), the Company's interconnection requirements provided in Rule No. 14. Section H, and is subject to any other requirements provided in the Interconnection Agreement.

C. METERING AND BILLING

1. The Company, at its expense, may install meter(s) to record the flow of electric power in each direction. The Eligible Customer-Generator shall, at its expense, provide, install and maintain all conductors, service switches, fuses, meter sockets, meter instrument transformer housing and mountings, switchboard meter test buses, meter panels, and similar devices required for service connection and meter installation and operation on the customer's premises in accordance with the Company's Rule No. 14, Section A.2.

SHEET NO. 47B
Effective February 20, 2018

Rule No. 24

CUSTOMER GRID SUPPLY PLUS – Continued

2. Eligible Customer-Generators served under this tariff who also receive energy from the Company shall be billed monthly for the energy supplied by the Company, in accordance with the Company's Rule No. 8, the applicable rate schedule, and the Company's rules filed with the Commission.

3. All rates, terms, and conditions from the applicable rate schedule will apply except for the minimum charge. The minimum charge shall be as follows:

Applicable Rate Schedule:

Schedule R, TOU-RI, TOU-R, TOU EV	$25.00 per month
Schedule G, TOU-G,	$50.00 per month
Schedule J, TOU-J, U, SS	Per Rate Schedule
Schedule DS	Per Rate Schedule
Schedule P	Per Rate Schedule
Schedule F	Per Rate Schedule
Schedule EV-F	Per Rate Schedule

4. The measurement of the kWh supplied by the Company to the Customer-Generator and the kWh received by the Company from the Customer-Generator shall begin on the date of installation of the required meter(s) or Company's approval to interconnect the Generating Facility, whichever comes later. For each billing period, the kWh received by the Company shall be assigned to kWh credits applied to calculate the current bill ("Credits Applied") and/or to kWh credits carried over to the future billing period(s) within the current 12-month period ("Banked Credits"). The Company shall assign to kWh Credits Applied the amount of kWh received up to the amount of the kWh supplied by the Company. Any kWh received by the Company in excess of the kWh supplied by the Company shall be added to kWh Banked Credits. The balance of kWh Banked Credits shall be reduced by any kWh Banked Credits Applied, which are described below.

SHEET NO. 47C
Effective February 20, 2018

Rule No. 24

CUSTOMER GRID SUPPLY PLUS – Continued

5. The applicable Energy Credit Rates for each rate schedule shall be as follows:

Energy Credit Rates for Each Applicable Rate Schedule:

Schedule R, TOU-RI, TOU-R, TOU EV	10.08 cents per kWh daily
Schedule G, TOU-G	10.08 cents per kWh daily
Schedule J, TOU-J, U, SS, EV-F	10.08 cents per kWh daily
Schedule DS	10.08 cents per kWh daily
Schedule P	10.08 cents per kWh daily
Schedule F	10.08 cents per kWh daily

Energy Credit Rates shall be fixed at the above levels through October 20, 2022. Thereafter, the applicable Energy Credit Rates shall be subject to modification by the Commission.

6. The Energy Credits for the billing period shall be calculated as the applicable Energy Credit Rate multiplied by the sum of kWh Credits Applied plus kWh Banked Credits Applied. Such Energy Credits shall appear as a separate line item on the customer bill. When the kWh supplied by the Company exceeds the kWh received by the Company, kWh Banked Credits Applied is the amount of the kWh Banked Credits that is included in the calculation of Energy Credits to reduce the Customer-Generator's electric bill calculated under the applicable rate schedule for the energy delivered by the Company to the Customer-Generator in the billing period. Application of Energy Credits may only reduce the electric bill to an amount equal to the minimum charge for the applicable rate schedule, plus any surcharges that are applicable in addition to the minimum charge.

7. A reconciliation will be made every 12 months for the customer's energy supplied by the Company with the energy received by the Company from the Eligible Customer-Generator's generating facility. This reconciliation will be performed as follows:

The kilowatthours supplied by the Company and the kilowatthours produced by the Eligible Customer-Generator shall be recorded for 12 billing periods. Coincident with the twelfth bill following the start of the grid supply plus contract and each 12-month period thereafter, the Eligible kWh shall be determined as the lesser of the kWh supplied to the Eligible Customer-Generator or the kWh received from the Eligible Customer-Generator over the 12-month period. Credited kWh shall be defined as the sum of kWh Credits Applied plus kWh Banked Credits Applied over the 12-month period. A Reconciliation Bill Credit shall be applied if the Eligible kWh is greater than the Credited kWh, and shall be calculated as the Energy Credit Rate multiplied by the difference between the Eligible kWh and the Credited kWh. If the Credited kWh is greater than or equal to the Eligible kWh, then there is no Reconciliation Bill Credit. At the time of the reconciliation, the balance of the kWh Banked Credits is set to zero for the next 12 month period.

If an Eligible Customer-Generator terminates its Customer Grid Supply Plus service under this tariff prior to the end of any 12-month period, the Company shall reconcile the customer's energy supplied by the Company with the energy produced by the Eligible Customer-Generator generating facility in the same manner as the reconciliation that would have been performed at the end of the normal 12-month period.

The kilowatthours supplied by the Company and the kilowatthours received from the Eligible Customer-Generator, including an accounting of the kWh Credits Applied, kWh Banked Credits, and kWh Banked Credits Applied in each billing period of the current 12-month period will be included in the customer's regular billing statement.

D. COMMUNICATIONS AND CONTROLLABILITY

Subject to the Communications and Controls requirements set forth in this Paragraph D, the Customer-Generator may elect to either: (1) have the Company install a separate smart production meter to be owned, installed or operated by the Company in which case the Company shall be responsible for the cost of metering and control of the Customer-Generator's Generating Facility (the "Smart Meter Option"); or (2) contract separately with a third-party aggregator, where the Company will accept aggregated data from such aggregators that can meet the Company's technical requirements for reliability of data collection and provision to the Company consistent with Section 8.f of Appendix I to this Rule No. 24 (the "Aggregator Option"). A Customer-Generator who elects the Aggregator Option shall be responsible for the costs of contracting with the third-party aggregator.

Whether the Smart Meter Option or the Aggregator Option is elected by the Customer-Generator, the Company shall be able to remotely measure, monitor, evaluate and verify technical compliance, Generating Facility performance, and power quality and, if necessary, control the Generating Facility ("Communication and Controls"). The Communication and Controls shall include monitoring of: (a) gross generation by the generating facility; (b) feedback of Watts, Vars, WattHours, current and voltage; and (c) if available, connection status of the Generating Facility, frequency, and operational state of charge (i.e., 0% to 100% of operational energy storage capacity). The acceptable method(s) of implementing and satisfying the Communication and Controls requirements may include cellular or other comparable technology.

Customer-Generators with single-phase Generating Facilities with a system size rating less than or equal to 175 Amps opting for the Smart Meter Option to satisfy the Communication and Controls requirement will be required to install a meter socket with line terminals wired to an acceptable location on the load side of the production meter or customer generator disconnect switch and load terminals wired to the power output terminals of the generator.

Rule No. 24

CUSTOMER GRID SUPPLY PLUS – Continued

Customer-Generators with single-phase Generating Facilities with a system size rating greater than 175 Amps or three-phase Generating Facilities of any size opting for the Smart Meter Option to satisfy the Communication and Controls requirement will be required to install a meter socket compatible with a form 2s meter. The line terminals of the meter socket shall be wired to an acceptable location on the load side of the utility revenue meter and the load terminals shall be wired to the control voltage terminal of a definite purpose contactor. The definite purpose contactor shall have normally open contacts rated appropriately for the Generating Facility design and installed with terminals connected to the power output terminals of the generator and the Customer Generator System Disconnect switch.

With respect to the Smart Meter Option, the LTE cellular connectivity and throughput speed will be measured pre-deployment by utilizing built in software toolkits with Verizon LTE mobile devices. LTE connectivity will be deemed acceptable using either a bandwidth test or a signal strength test. The bandwidth test does not indicate the minimum throughput required for the operation of the Smart Meter Option and is only used to determine acceptable connectivity. The minimum acceptable bandwidth requirement for connectivity testing shall be 1.0 Mbps download and 0.5 Mbps upload. Should the site fail the bandwidth test, a signal strength test will be performed and shall be deemed acceptable with minimum readings of -110 dBm RSRP and an RSRQ of -12 dB or better. Lower signal strength values are considered marginal and may result in lower performance which can be verified by testing the meter on-site. For example, -120 dBm is a lower signal strength measurement than -110 dBm. As necessary, utility personnel will determine and record official cellular connectivity tests prior to the installation and operation of the smart production meter at production meter socket location indicated on the site plan included with the application. Furthermore, once the meter installation is completed, utility personnel will verify the meter is successfully communicating with the Verizon Grid Wide platform.

Customer-Generators whose geographic location, or other variable, prevents the Customer-Generator from meeting the foregoing minimum cellular connectivity requirements ("Outlying Customer-Generators") shall not be precluded from participating in the Customer Grid Supply Plus Program. In such case, the Company shall utilize non-cellular alternatives to establish the connectivity levels sufficient to implement and satisfy the Communications and Controls requirements, to the extent such alternatives are available and acceptable, as determined by the Company ("Non-Cellular Alternatives").

If the Company's remote control of an Outlying Customer-Generator's Generating Facility cannot be established through Non-Cellular Alternatives, the Outlying Customer-Generator shall install at the Outlying Customer-Generator's premises a second meter socket, to allow for a seamless transition at such time when the technology becomes available, or is otherwise appropriate for installation at the Outlying Customer-Generator's premises, to allow the Company to remotely control such Outlying Customer-Generator's Generating Facility.

SHEET NO. 47H
Effective ~~October 5, 2018~~Month Day, Year

Rule No. 24

CUSTOMER GRID SUPPLY PLUS – Continued

E. INTERCONNECTION PROCESS

1. Eligible Customer-Generator requests to interconnect and operate a Generating Facility in parallel with the Company's electric system will be processed in accordance with the procedures in the Interconnection Process Overview provided in Appendix III of Rule 14, Paragraph H.

2. Under no circumstances shall a Customer-Generator interconnect and operate a Generating Facility in parallel with the Company's electric system without prior written approval by the Company in the form of a fully executed Interconnection Agreement.

F. MICROGRIDS

1. Capitalized terms used in this section are as defined in Rule No. XX, Microgrid Services Tariff.

2. During Grid-Connected Mode, the Microgrid will be operated in parallel with the Company's System.

3. A Customer may operate its Generating Facility as part of a Customer Microgrid or be a participant in a Hybrid Microgrid.

4. A Customer who intends to operate its Generating Facility within a Customer Microgrid, or as a participant in a Hybrid Microgrid, shall notify the Company in its application through the Customer Interconnection Tool.

5. A Customer who operates its Generating Facility as part of a Microgrid after obtaining interconnection approval from the Company shall update its application through the Customer Interconnection Tool. Such notification and revision shall satisfy the Customer's notice requirements set forth in Tariff Rule 3B (Change in Customer's Equipment or Operations).

6. Customer Microgrids and Hybrid Microgrid Participants shall comply with the requirements of Rule No.XX, Microgrid Services Tariff, including Section H, Microgrid Operation.

Rule No. 24

CUSTOMER GRID SUPPLY PLUS – Continued

G~~F~~. APPLICATION CHARGE

Each Eligible Customer submitting an application for service under this tariff shall pay a one-time application charge of $50.00 unless such application is submitted electronically via the Company's online Customer Interconnection Tool, in which case no application charge will be assessed.

SHEET NO. 48
Effective February 20, 2018
Proposed Changes: January 17, 2021

Rule No. 25

SMART EXPORT PROGRAM

A. AVAILABILITY FOR CUSTOMER-GENERATORS

The Smart Export Program is available to Eligible Customer-Generators who own or lease from a third party and operate or contract to operate with a third party a solar, wind turbine, biomass, or hydroelectric energy generating facility, or a hybrid system consisting of two or more of these facilities ("Generating Facility"), with a capacity of not more than one hundred kilowatts (100 kW) and where:

1. The Generating Facility which may include an energy storage system, is located on the Eligible Customer-Generator's premises,

2. The Generating Facility will be operated in parallel with the Company's transmission and distribution facilities,

3. The Generating Facility is in conformance with the Company's interconnection requirements provided in Rule No. 14, Paragraph H, the requirements of this tariff and the Smart Export Program Interconnection Agreement, and

4. The Generating Facility is sized and designed such that all of the Generating Facility's output is intended to offset all or part of the Eligible Customer-Generator's own electrical requirements ("Host Load").

B. SMART EXPORT INTERCONNECTION AGREEMENT

1. Eligible Customer-Generator shall complete and sign an application for service and a standard Smart Export Interconnection Agreement (100 kW or less) provided as Appendix I of this Rule ("Interconnection Agreement"), to receive service under this tariff. Where the Eligible Customer-Generator is not the person or entity in whose name electric service is rendered for the Eligible Customer-Generator's premises where the Generating Facility is located, i.e. where a landlord-tenant relationship exists, only the Eligible Customer-Generator shall be required to complete and sign the application for service and the Interconnection Agreement.

2. The Eligible Customer-Generator's Generating Facility and interconnection systems must be in compliance with all applicable safety and performance standards of the National Electric Code (NEC), the Institute of Electrical and Electronic Engineers (IEEE), accredited testing laboratories such as Underwriters Laboratories (UL), the Company's

interconnection requirements provided in Rule No. 14. Section H, and is subject to any other requirements provided in the Interconnection Agreement.

Rule No. 25

SMART EXPORT PROGRAM - Continued

C. METERING AND BILLING

1. The Company, at its expense, may install meter(s) to record the flow of electric power in each direction. The Eligible Customer-Generator shall, at its expense, provide, install and maintain all conductors, service switches, fuses, meter sockets, meter instrument transformer housing and mountings, switchboard meter test buses, meter panels and similar devices required for service connection and meter installation and operation on the customer's premises in accordance with the Company's Rule No. 14, Section A.2.

2. Eligible Customer-Generators served under this tariff who also receive energy from the Company shall be billed monthly for the energy supplied by the Company, in accordance with the Company's Rule No. 8, the applicable rate schedule, and the Company's rules filed with the Commission.

3. All rates, terms, and conditions from the applicable rate schedule will apply except for the minimum charge. The minimum charge shall be as follows:

Applicable Rate Schedule:

Schedule R, TOU-RI, TOU-R, TOU EV	$25.00 per month
Schedule G, TOU-G,	$50.00 per month
Schedule J, TOU-J, U, SS	Per Rate Schedule
Schedule DS	Per Rate Schedule
Schedule P	Per Rate Schedule
Schedule F	Per Rate Schedule
Schedule EV-F	Per Rate Schedule

Rule No. 25

SMART EXPORT PROGRAM - Continued

4. The measurement of the kWh supplied by the Company to the Customer-Generator and the kWh received by the Company from the Customer-Generator shall begin on the date of installation of the required meter(s) or Company's approval to interconnect the Generating Facility, whichever comes later. For each billing period, the kWh received by the Company within the 4:00 p.m. to 12:00 a.m. and the 12:00 a.m. to 9:00 a.m. export windows shall be assigned to kWh credits applied to calculate the current bill ("Credits Applied") and/or to kWh credits carried over to the future billing period(s) within the current 12-month period (" Banked Credits"). The Company shall assign to kWh Credits Applied the amount of kWh received up to the amount of the kWh supplied by the Company. Any kWh received by the Company in excess of the kWh supplied by the Company shall be added to kWh Banked Credits. The balance of kWh Banked Credits shall be reduced by any kWh Banked Credits Applied, which are described below. Customers shall not be assigned any credits for the kWh received by the Company within the 9:00 a.m. to 4:00 p.m. non-export window.

5. The applicable Energy Credit Rates for each rate schedule shall be as follows:

Energy Credit Rates for Each Applicable Rate Schedule from 12:00 a.m. to 9:00 a.m.:

Schedule R, TOU-RI, TOU-R, TOU EV	14.97 cents per kWh daily
Schedule G, TOU-G	14.97 cents per kWh daily
Schedule J, TOU-J, U, SS, EV-F	14.97 cents per kWh daily
Schedule DS	14.97 cents per kWh daily
Schedule P	14.97 cents per kWh daily
Schedule F	14.97 cents per kWh daily

SHEET NO. 48C
Effective February 20, 2018

Rule No. 25

SMART EXPORT PROGRAM - Continued

Energy Credit Rates for Each Applicable Rate Schedule from 9:00 a.m. to 4:00 p.m.:

Schedule R, TOU-RI, TOU-R, TOU EV	0.00 cents per kWh daily
Schedule G, TOU-G	0.00 cents per kWh daily
Schedule J, TOU-J, U, SS, EV-F	0.00 cents per kWh daily
Schedule DS	0.00 cents per kWh daily
Schedule P	0.00 cents per kWh daily
Schedule F	0.00 cents per kWh daily

Energy Credit Rates for Each Applicable Rate Schedule from 4:00 p.m. to 12:00 a.m.:

Schedule R, TOU-RI, TOU-R, TOU EV	14.97 cents per kWh daily
Schedule G, TOU-G	14.97 cents per kWh daily
Schedule J, TOU-J, U, SS, EV-F	14.97 cents per kWh daily
Schedule DS	14.97 cents per kWh daily
Schedule P	14.97 cents per kWh daily
Schedule F	14.97 cents per kWh daily

Energy Credit Rates shall be fixed at the above levels through October 20, 2022. Thereafter, the applicable Energy Credit Rates shall be subject to modification by the Commission.

Rule No. 25

SMART EXPORT PROGRAM - Continued

6. The Energy Credits for the billing period shall be calculated as the applicable Energy Credit Rate multiplied by the sum of kWh Credits Applied plus kWh Banked Credits Applied. Such Energy Credits shall appear as a separate line item on the customer bill. When the kWh supplied by the Company exceeds the kWh received by the Company, kWh Banked Credits Applied is the amount of the kWh Banked Credits that is included in the calculation of Energy Credits to reduce the Customer-Generator's electric bill calculated under the applicable rate schedule for the energy delivered by the Company to the Customer-Generator in the billing period. Application of Energy Credits may only reduce the electric bill to an amount equal to the minimum charge for the applicable rate schedule, plus any surcharges that are applicable in addition to the minimum charge.

7. A reconciliation will be made every 12 months for the customer's energy supplied by the Company with the energy received by the Company from the Eligible Customer-Generator's generating facility. This reconciliation will be performed as follows:

The kilowatthours supplied by the Company and the kilowatthours produced by the Eligible Customer-Generator shall be recorded for 12 billing periods. Coincident with the twelfth bill following the start of the smart export contract and each 12-month period thereafter, the Eligible kWh shall be determined as the lesser of the kWh supplied to the Eligible Customer-Generator or the kWh received from the Eligible Customer-Generator over the 12-month period. Credited kWh shall be defined as the sum of kWh Credits Applicd plus kWh Banked Credits Applied over the 12-month period. A Reconciliation Bill Credit shall be applied if the Eligible kWh is greater than the Credited kWh, and shall be calculated as the Energy Credit Rate multiplied by the difference between the Eligible kWh and the Credited kWh. If the Credited kWh is greater than or equal to the Eligible kWh, then there is no Reconciliation Bill Credit. At the time of the reconciliation, the balance of the kWh Banked Credits is set to zero for the next 12 month period.

Superseding SHEET NO. 48E
Effective ~~February 20, 2018~~June 29, 2018
~~June 29, 2018~~Month Day, Year

REVISED SHEET NO. 48E
Effective

Rule No. 25

SMART EXPORT PROGRAM - Continued

If an Eligible Customer-Generator terminates its Smart Export service under this tariff prior to the end of any 12-month period, the Company shall reconcile the customer's energy supplied by the Company with the energy produced by the Eligible Customer-Generator generating facility in the same manner as the reconciliation that would have been performed at the end of the normal 12-month period.

The kilowatthours supplied by the Company and the kilowatthours received from the Eligible Customer-Generator, including an accounting of the kWh Credits Applied, kWh Banked Credits, and kWh Banked Credits Applied in each billing period of the current 12-month period will be included in the customer's regular billing statement.

D. INTERCONNECTION PROCESS

1. Eligible Customer-Generator requests to interconnect and operate a Generating Facility in parallel with the Company's electric system will be processed in accordance with the procedures in the Interconnection Process Overview provided in Appendix III of Rule 14, Paragraph H.

2. Under no circumstances shall a Customer-Generator interconnect and operate a Generating Facility in parallel with the Company's electric system without prior written approval by the Company in the form of a fully executed Interconnection Agreement.

E. MICROGRIDS

1. Capitalized terms used in this section are as defined in Rule No. XX, Microgrid Services Tariff.

2. During Grid-Connected Mode, the Microgrid will be operated in parallel with the Company's System.

3. A Customer may operate its Generating Facility as part of a Customer Microgrid or be a participant in a Hybrid Microgrid.

4. A Customer who intends to operate its Generating Facility within a Customer Microgrid, or as a participant in a Hybrid Microgrid, shall notify the Company in its application through the Customer Interconnection Tool.

REVISED SHEET NO. 48F
Effective Month Day, Year

~~Superseding SHEET NO. 48F~~ ~~REVISED SHEET NO. 48F~~
~~Effective February 20, 2018~~ ~~Effective June 29, 2018~~

Rule No. 25

SMART EXPORT PROGRAM - Continued

5. A Customer who operates its Generating Facility as part of a Microgrid after obtaining interconnection approval from the Company shall update its application through the Customer Interconnection Tool. Such notification and revision shall satisfy the Customer's notice requirements set forth in Tariff Rule 3B (Change in Customer's Equipment or Operations).

6. Customer Microgrids and Hybrid Microgrid Participants shall comply with the requirements of Rule No.XX, Microgrid Services Tariff, including Section H, Microgrid Operation.

~~2.~~

~~Superseding SHEET NO. 48F~~ ~~REVISED SHEET NO. 48F~~
~~Effective February 20, 2018~~ ~~Effective June 29, 2018~~

~~Rule No. 25~~

~~SMART EXPORT PROGRAM - Continued~~

E. APPLICATION CHARGE

Each Eligible Customer submitting an application for service under this tariff shall pay a one-time application charge of $50.00 unless such application is submitted electronically via the Company's online Customer Interconnection Tool, in which case no application charge will be assessed.

Rule No. 26
COMMUNITY-BASED RENEWABLE ENERGY PROGRAM
PHASE 1

A. AVAILABILITY

Phase 1 ("Phase 1") of the Company's Community-Based Renewable Energy ("CBRE") program ("Program") is available to residential and commercial customers of the Company ("Customers") where:

1. Customer has a current electricity account with the Company and has received service at the same location for which they are requesting participation for at least 6 months at the time of enrollment and has not received any disconnection notifications at that same location within the last 12 months;

2. Customer is not currently enrolled or participating in Schedule Q, Net Energy Metering, Feed-in Tariff, Standard Interconnection Agreement, Customer Grid Supply, Customer Grid Supply Plus, Smart Export, or Customer Self Supply ("CSS") tariff program, or similar customer program; and

3. Customer is not currently participating in another CBRE Phase 1 Facility.

B. CUSTOMER PARTICIPATION

Customers who subscribe to a CBRE Phase 1 Facility ("Facility") are defined as "Subscribers."

1. Customers shall be allowed to purchase or lease an interest in the energy output of any eligible CBRE Phase 1 Facility on the same island as their service address that is allocated CBRE Phase 1 Program capacity to offset their energy consumption.

2. Subscribers shall be required to enter into an appropriate CBRE Subscriber Agreement ("Agreement") with a CBRE subscriber organization ("Subscriber Organization"). The Agreement shall contain standard information and provisions that ensure transparency and proper consumer protection. The Agreement shall include or be supplemented by, at minimum, the following elements:

Order No. 35560; Filed June 29, 2018,

Transmittal Letter dated July 10, 2018.

Rule No. 26 - Continued
COMMUNITY-BASED RENEWABLE ENERGY PROGRAM
PHASE 1

a. CBRE Phase 1 Facility and Subscriber Organization information

   i. CBRE Phase 1 Facility name and address;
   ii. CBRE Subscriber Organization and/or Owner name, address, website URL, phone number, and email address;
   iii. Subscriber name, address, phone number, and email address; and
   iv. Subscriber's Utility name and account number;

b. Financial Information:

   i. Credit rate ("Credit Rate") and calculation;
   ii. Bill credit mechanism and timing;
   iii. Tax and securities implications;
   iv. Use of escrow account to hold any pre-development enrollment fees or deposits, which shall be released to Subscriber Organization upon commercial operation of the Facility; and
   v. Transfer and/or exit fees and terms;

c. The Subscriber Agency Agreement and Consent Form attached hereto as Appendix I, which each Subscriber Organization shall complete with each Subscriber acquiring an interest in such Subscriber Organization's CBRE Facility, permitting the sharing of: .

   i. Subscriber's Account and Energy Usage Data;
   ii. Subscription Information;
   iii. Aggregated CBRE Project data and anonymized Subscriber data; and
   iv. Subscriber data in response to information requests from the PUC or the Division of Consumer Advocacy ("CA").

d. The standard form Disclosure Checklist is attached hereto as Appendix II, which each Subscriber Organization shall complete with each Subscriber acquiring an interest in such Subscriber Organization's CBRE Facility.

Order No. 35560; Filed June 29, 2018,
Transmittal Letter dated July 10, 2018.

Rule No. 26 - Continued
COMMUNITY-BASED RENEWABLE ENERGY PROGRAM
PHASE 1

3. Subscribers shall obtain approval of eligibility, confirm maximum buy-in level and apply to enroll into the CBRE Program through the Company (the Company, in its role as administrator of the CBRE Program, is sometimes referred to herein as the "Administrator"). Company shall facilitate completion of these tasks, but final approval and enrollment of the Subscriber into a Subscriber's Organization's CBRE Phase 1 Facility shall rest with such Subscriber Organization.

4. Subscriber's effective kilowatt ("kW") alternating current ("AC") interest in the CBRE Phase 1 Facility shall be calculated based on the Subscriber's portion of the renewable energy output of the CBRE Phase 1 Facility multiplied by the total capacity of the CBRE Phase 1 Facility in kW AC.

5. Subscribers shall be required to purchase a minimum of 1 kW AC, except in the case of confirmed low to moderate income ("LMI") Subscribers for which this requirement shall be 0.5 kW AC.

6. Subscribers shall be permitted to purchase a CBRE Program interest equivalent to an expected production of no more than 100 percent of their historic energy consumption for the previous 12 months.

    a. Company shall use the 12 months immediately prior to the first billing cycle upon which a Subscriber is eligible to receive a credit for the CBRE Subscription to determine the Subscriber's previous 12 months of energy consumption.
    b. If Subscriber does not have a 12 month billing history as of that first billing cycle, and there is not 12 months of billing history, including billing history of another customer associated with the Subscriber's premises, the Company shall use the available monthly average consumption multiplied over 12 months in order to generate a proxy average annual consumption.

Rule No. 26 - Continued
COMMUNITY-BASED RENEWABLE ENERGY PROGRAM
PHASE 1

7. In Phase 1, 40 percent of the total output of each project's total CBRE capacity shall be reserved for individual subscriptions up to 50 kW.

8. An eligible Customer shall be allowed to acquire and hold an interest in only one (1) CBRE Phase 1 Facility at any given time.

9. Subscriber shall maintain, for the duration of their participation in the CBRE Program, an electricity account and service address on the same island as the CBRE Phase 1 Facility in which they are participating.

10. Subscriber may change the premises to which the CBRE Phase 1 Facility electricity generation shall be attributed, as long it is on the same island and meets the eligibility requirements set forth herein. No transfer fee shall be applied.

11. If Subscriber requests to transfer their interest to another Customer, the Subscriber Organization shall confirm that Customer's eligibility as set forth herein. Any payment for the transfer shall be in accordance with the preset repurchase/resale price schedule outlined in the Agreement.

    a. There shall be no transfer charge/fee if the meter associated with the account remains unchanged.
    b. A transfer shall be at least 50% of the selling Subscriber's interest.
    c. Any transfer will not be effective until the Subscriber Organization notifies the Administrator of the transfer. For any notice of transfer on or prior to the twentieth (20th) day of any month, such transfer will be effective as of the first (1st) day of that month. For any notice of transfer after the twentieth (20th) day of a month, the transfer will be effective as of the first (1st) day of the next month.

Rule No. 26 - Continued
COMMUNITY-BASED RENEWABLE ENERGY PROGRAM
PHASE 1

12. If Subscriber requests to sell all or any portion of their Subscription back to the Subscriber Organization, Subscriber Organization shall buy back the interest in accordance with the preset repurchase/resale price schedule outlined in the Agreement.

    a. Subscriber Organization shall complete the buy-back of the Subscriber's interest within thirty (30) days of the Subscriber's request.
    b. Upon completion of a subscription buy-back, the Subscriber Organization shall notify the Company within two business days of completion of the transaction. The Company shall confirm such buy-back in the Subscriber database and cease CBRE participation credits effective as communicated by the Subscriber Organization on the first day of the month of notification if such notice is given on or prior to the twentieth (20th) day of the month. Notice provided after the twentieth (20th) day of the month will be effective as of the first (1st) day of the next month.

13. Nothing in the Agreement shall be deemed to alter or modify any rate schedule, charge, or condition of service established from time to time by the Commission for electric service provided by the Company. All such rates and charges from the Customer's applicable rate schedule shall apply and remain, subject to change in accordance with Commission rules.

Rule No. 26 - Continued
COMMUNITY-BASED RENEWABLE ENERGY PROGRAM
PHASE 1

C. CREDIT RATE

1. Subscribers served under this tariff who also receive energy from the Company shall be billed monthly for the energy supplied by the Company, in accordance with the Company's Rule No. 8, the applicable rate schedule, and Company's rules filed with the Commission.

2. All rates, terms, and conditions from the applicable rate schedule will apply.

3. The applicable credit rates ("Credit Rates") for CBRE Phase 1 subscriptions purchased or leased by Subscribers for each rate schedule shall be as follows:

   Energy Credit Rates for Each Applicable Rate Schedule:

Schedule R, TOU-RI, TOU-R, TOU-EV	15.00 cents per kWh daily
Schedule G, TOU-G	15.00 cents per kWh daily
Schedule J, TOU-J, U, SS, EV-F	15.00 cents per kWh daily
Schedule P	15.00 cents per kWh daily
Schedule DS	15.00 cents per kWh daily
Schedule F	15.00 cents per kWh daily

   Credit Rates shall be fixed at the above levels for the term of the Agreement, which for Phase 1 shall be the CBRE Phase 1 Facility life. Thereafter, the applicable energy credit rates shall be subject to modification by the Commission.

Order No. 35560; Filed June 29, 2018,
Transmittal Letter dated July 10, 2018.

Rule No. 26 - Continued
COMMUNITY-BASED RENEWABLE ENERGY PROGRAM
PHASE 1

4. The monthly CBRE participation credit for each Subscriber shall begin to accrue on the first day of the month in which Subscriber completes the purchase or lease of Subscriber's subscription into a CBRE Phase 1 Facility, provided that Subscriber Organization promptly notifies the Administrator of Subscriber's subscription no later than the twentieth (20th) day of the month in which Subscriber subscribed into the CBRE Phase 1 Facility. Subscriber's monthly CBRE participation credit shall begin accruing on the first (1st) day of the next month if the notice by the Subscriber Organization is made after the twentieth (20th) day of the month. The amount of the Subscriber's monthly CBRE participation credit shall be equal to the Subscriber's interest in the energy output of the Facility, multiplied by the Facility's actual energy output, multiplied by the applicable Credit Rate per kilowatt-hour ("kWh").

5. A Subscriber's monthly CBRE participation credit shall be applied to offset eligible charges on the Subscriber's electric bill no earlier than the 15th day of the following month but no later than two billing cycles. Subscribers will see eligible credits on a future bill depending on the day their meter is read. Eligible charges on the Subscriber's electric bill shall be all light and power charges.

6. The Subscriber's electric bill cannot be reduced below the sum of the customer charge, the Green Infrastructure Fee, and any other per-customer charge for the customer's applicable rate schedule or the minimum bill applicable in the underlying tariff, whichever is greater.

Order No. 35560; Filed June 29, 2018,
Transmittal Letter dated July 10, 2018.

Rule No. 26 - Continued
COMMUNITY-BASED RENEWABLE ENERGY PROGRAM
PHASE 1

7. If the Subscriber's monthly CBRE participation credit exceeds the eligible charges, the value of excess credits shall be carried over to the next billing period(s) within the current 12-month period, as a CBRE participation credit and applied to the Subscriber's electric bill(s) subject to paragraph 5 and 6 above. Reconciliation will be made at the end of every 12-month period by applying the Subscriber's remaining CBRE participation credit to the Subscriber's remaining eligible charges within the 12-month period. Any CBRE participation credit that remains unused at the end of each 12-month period shall be extinguished.

8. If the Subscriber terminates its CBRE service prior to the end of any 12-month period, the Company shall reconcile the remaining CBRE participation credit to remaining eligible charges at the end of the monthly billing period when service was terminated, similar to the reconciliation that would have been performed at the end of the normal 12-month period. Any CBRE participation credit that remains unused shall be extinguished.

Rule No. 26 - Continued
COMMUNITY-BASED RENEWABLE ENERGY PROGRAM
PHASE 1

D. SUBSCRIBER ORGANIZATION PARTICIPATION

1. A CBRE Phase 1 Facility may be developed by an approved Subscriber Organization. An applicant seeking to become an approved Subscriber Organization shall be referred to as an "Applicant" until approved.

2. Prior to developing a Facility, an Applicant shall submit a completed Application to the Company, which shall provide the following in order to be considered a complete Application:

   a. A one-time Application processing fee of $1,000 per application, 75% of which shall be refunded if the Applicant submits a CBRE Phase 1 Facility less than or equal to 250 kW AC and is not selected to receive CBRE Program Phase 1 capacity;

   b. Applicant company name, contact information, and address, and indicate their role (e.g., Subscriber Organization, owner, or operator);

   c. Applicant contact person name, contact information, and address;

   d. Entity name, contact information, address, and identity role of the Subscriber Organization if approved; if entities other than the Subscriber Organization will act as either owner or operator of the CBRE Facility, name, role identification, contact information, and address shall be provided for those other entities;

   e. Proposed CBRE Phase 1 Facility name, address, and estimated completion date;

   f. CBRE Phase 1 Facility system nameplate direct current (DC) capacity, AC output (inverter nameplate), mount location, tracker type, azimuth, and tilt.

Rule No. 26 - Continued
COMMUNITY-BASED RENEWABLE ENERGY PROGRAM
PHASE 1

g. If the Applicant is a foreign entity, confirmation from the State of Hawai‘i Department of Commerce and Consumer Affairs that the Applicant is currently authorized to do business in the State of Hawai‘i as of the date of submittal.

h. A Certificate of Good Standing for the Applicant obtained from the State of Hawai‘i Department of Commerce and Consumer Affairs dated no earlier than thirty (30) days prior to submittal by the Applicant.

i. Demonstration of capability to deliver. Applicant, its affiliated companies, partners, and/or contractors and consultants on the Applicant's team, shall provide written documentation that demonstrates experience in the development and operation of at least one renewable energy generation facility similar in size, scope, and structure to the Facility being proposed. The independent observer ("IO") may waive this provision for Applicants proposing systems under 250 kW AC, that meet specific criteria, such as 501(c)(3) organizations, Customers choosing to collectively develop systems for their own benefit as Subscribers, organizations focused on delivering services to LMI ratepayers, or others, as determined appropriate by the IO.

Applications shall be accepted beginning on the effective date of the tariff. Applications deemed complete (providing all information required under Section D.2 above) shall receive a timestamp which shall serve as the date of the Applicant's application for award and queue purposes.

3. Phase 1 CBRE Program capacity shall be awarded on a first-come, first-served basis based on the timestamp of a completed Application. If an Applicant submits an Application that does not contain all the required items listed in Section D.2 above, the Application shall be deemed incomplete and the timestamp for the completed Application shall be when the last item(s) is/are received from the Applicant that renders the Application complete under Section D.2, with the exception of Section D.2.a, regarding Application processing fee payment and Section D.2.i, regarding the "waiver" from the IO. If the application fee or the waiver is the only item missing and it is received within fifteen (15) days from the date of submission, the time stamp will be the date the Application was submitted electronically. Partially completed Applications will be deemed abandoned if all required items are not submitted so as to render the Application complete after sixty (60) days.

Order No. 35560; Filed June 29, 2018,
Transmittal Letter dated July 10, 2018.

Rule No. 26 - Continued
COMMUNITY-BASED RENEWABLE ENERGY PROGRAM
PHASE 1

Phase 1 Applications for CBRE Phase 1 Facilities shall be conditionally accepted subject to verification of the requirements in Section D.2 above. Upon successfully meeting the CBRE requirements, the Facility shall be accepted into Phase 1 of the CBRE Program if unused capacity is available to accept the Applicant's project. If the Applicant's proposed project size exceeds the available capacity remaining for Phase 1, the Applicant shall have the one-time option to reduce the proposed size of its Facility to the remaining capacity available. If the Applicant does not exercise this option, the Applicant's application shall be placed in the Phase 1 queue described below. Facility selection shall continue until the capacity allocation for Phase 1 on each island is fully allocated. If a Facility drops out after selection for inclusion in Phase 1 the allocation for such Facility shall be added back to the capacity allocation for the respective island and the first complete Application for a CBRE Phase 1 Facility in the queue for that island (with the one-time option described above) shall be offered the opportunity to become a CBRE Phase 1 Subscriber Organization. The Company shall continue to offer Subscriber Organization status to Applicants in the applicable queue until the capacity allocation made available is filled. Concurrently and after acceptance into Phase 1, CBRE Phase 1 Facilities shall undergo completeness and technical review under Company's Rule 14H for interconnection.

4. After any applicable capacity limitations are met in Phase 1, excess completed Applications for CBRE Phase 1 Facilities in that category shall be placed in a queue to replace any Phase 1 capacity dropouts. Phase 1 will terminate one (1) year after the commencement of Phase 2 of the CBRE Program ("Phase 2"). If, at the conclusion of Phase 1, there remains excess capacity and no Applicants in the queue desiring to use such capacity, the remaining unused capacity shall be extinguished or added to the available capacity in Phase 2, as directed by the Commission. The queue for Phase 1 shall be terminated as well and any subsequent failure of a CBRE Phase 1 Facility shall not be replaced.

Rule No. 26 - Continued
COMMUNITY-BASED RENEWABLE ENERGY PROGRAM
PHASE 1

5. Applications for queued CBRE Phase 1 Facilities may be resubmitted at no additional cost in Phase 2.

6. Additional fees and deposit required from Subscriber Organizations in addition to the Application processing fee shall include:

   a. Any applicable interconnection fees, costs and expenses necessary to interconnect the CBRE Phase 1 Facility to the system grid; and
   b. A $5/kW AC Program Administration Fee, assessed annually commencing on the first day of the month immediately succeeding the date of initial commercial operations for any CBRE Phase 1 Facility.

7. "Unsubscribed energy" is CBRE Phase 1 Facility output that is not associated with any Subscriber subscription and therefore not allocated to a Subscriber. The following shall be effective six months from the date of initial commercial operations. Compensation for unsubscribed energy shall be as follows:

   a. For any Facility with more than 15 percent unsubscribed energy, the compensation for the Unsubscribed energy for that month shall be discounted by the percentage of energy that is unsubscribed.
   b. Unsubscribed capacity shall be calculated at the end of the month and applied retroactively to the CBRE Phase 1 Facility when calculating that month's prior unsubscribed credits.

Order No. 35560; Filed June 29, 2018,
Transmittal Letter dated July 10, 2018.

Rule No. 26 - Continued
COMMUNITY-BASED RENEWABLE ENERGY PROGRAM
PHASE 1

8. A Subscriber Organization shall be required to have a minimum of four individual Subscribers per CBRE Phase 1 Facility at all times. For a period of six (6) months following commercial operations, the Subscriber Organization shall incur no penalty if it should fall below this minimum number of Subscribers. Effective after six (6) months of commercial operations, the following shall be placed into effect for the remainder of the term of the Subscriber Organization's Facility:

    a. For any Facility which does not have the minimum four (4) individual Subscribers for six (6) consecutive months, , the Subscriber Organization's compensation for energy delivered in the next month shall be reduced by 50%.
    b. If the Subscriber Organization's unsubscribed energy is also greater than 15% in such month, the compensation for energy delivered in that month shall be reduced by a percentage equal to the higher of (1) 50% or (2) the percentage of unsubscribed energy for that month.

9. Subscriber Organizations notification of a Subscriber's purchase or lease of a subscription shall be Subscriber Organization's representation and warranty that the Subscriber Organization has executed a Subscriber Agreement with the Subscriber and provided a completed Disclosure Checklist executed by the Subscriber that is attached to the Subscriber Agreement for such Subscriber. The Administrator, IO or the Commission may request copies of all Subscriber Agreements and/or Disclosure Checklists completed by the Subscriber Organization with its Subscribers at any time during the term of the Subscriber Organization's Facility.

10. The Company may, but shall not be required to, confirm that the Subscribers submitted by the Subscriber Organization are qualified pursuant to Section A above for participation in the CBRE Phase 1 Program. If any Subscribers are not qualified or are not purchasing an interest within the allowed limits set out in Section B above, then the Subscribers shall not be accepted into Phase 1 of the CBRE Program and the Company shall notify the Subscriber Organization of all disqualified Subscribers and remove them from the roster of that Subscriber Organization's list of Subscribers.

Order No. 35560; Filed June 29, 2018,
Transmittal Letter dated July 10, 2018.

Rule No. 26 - Continued
COMMUNITY-BASED RENEWABLE ENERGY PROGRAM
PHASE 1

E. CAPACITY ALLOCATION

1. Phase 1 capacity allocation is for "Standard" CBRE Facilities, which are defined as all CBRE Facilities that are developed, owned, or operated by a third party.

2. Only solar photovoltaic facilities shall be allowed in Phase 1.

3. The capacity allocation in Phase 1 shall be 5.0 MW.

Rule No. 26 - Continued
COMMUNITY-BASED RENEWABLE ENERGY PROGRAM
PHASE 1

F. COMMUNICATIONS AND CONTROLLABILITY

1. The Facility shall include a telemetry and control interface which allows the Company to remotely measure, monitor, evaluate and verify technical compliance, CBRE Facility performance, and power quality and, if necessary, control the CBRE Facility ("Communication and Controls"). The acceptable method(s) of implementing the Communication and Control requirements will be specified by the Company. Monitoring will be performed by system dispatchers or operators at the Company's control center.

2. For CBRE Facilities with an aggregate capacity greater than or equal to 250 kW, computerized supervisory control shall be required, and include monitoring of: (a) gross generation by the CBRE Facility; (b) feedback of Watts, Vars, WattHours, current and voltage; (c) Vars furnished by the utility; (d) status of the interrupting device; and (e) if available, monitoring of: frequency (Hertz). In addition, the supervisory control will allow the utility to trip the interrupting device pursuant to the terms of an interconnection agreement ("Interconnection Agreement") between the Subscriber Organization and the Company, attached hereto as Appendix III.

3. For CBRE Facilities with an aggregate capacity less than 250 kW shall comply with the Communication and Control requirements stated in Section F.2 above, or in the alternative, upon Company approval, may implement Communication and Control through cellular or comparable technology, and include monitoring of: (a) gross generation by the CBRE Facility; (b) feedback of Watts, Vars, WattHours, current and voltage; and (c) if available, monitoring of: connection status of the CBRE Facility, frequency (Hertz). In addition, the cellular or comparable technology control will allow the utility to trip the CBRE Facility pursuant to the terms of the Interconnection Agreement.

Order No. 35560; Filed June 29, 2018,
Transmittal Letter dated July 10, 2018.

Rule No. 26 - Continued
COMMUNITY-BASED RENEWABLE ENERGY PROGRAM
PHASE 1

G. INTERCONNECTION

1. All CBRE Phase 1 Facilities shall be designed to interconnect and operate in parallel with the Company's system without adversely affecting the operations of its customers and without presenting safety hazards to the Company's or other customers' personnel. Such Facilities and the interconnection systems shall be in compliance with all applicable safety and performance standards of the National Electric Code (NEC), the Institute of Electrical and Electronics Engineers (IEEE), the Company's interconnection standards and procedures provided in Rule No. 14H, and Rule No. 19, as amended from time to time, and also subject to any other requirements as may be specified in the Interconnection Agreement or the standard form contract ("Standard Form Contract" or "SFC"), attached here to as Appendix IV).

2. CBRE Phase 1 Facilities shall have priority for available hosting capacity on a particular circuit over projects planned for that particular circuit that have not commenced its technical review process.

3. CBRE Phase 1 Facilities interconnected at the Distribution Level[1] that are selected shall follow the applicable Rule No. 14H interconnection process at the time of interconnection.

4. CBRE Phase 1 Facilities interconnecting at the Sub-Transmission and Transmission levels shall follow the interconnection process applicable to their Facilities at the time of interconnection.

5. Each CBRE Phase 1 Facility shall have one interconnection point and suitable metering equipment to measure the energy output and data required for calculation of Compensable Curtailment (as defined in the SFC) of the CBRE Phase 1 Facility.

[1] Distribution system (Level) is defined as interconnection to electrical wires, equipment, and other facilities at the distribution voltage levels (such as 25kV (Hawaiian Electric only), 12kV, or 4kV) owned or provided by the Company, through which the utility provides electrical service to its customers.

Order No. 35560; Filed June 29, 2018,
Transmittal Letter dated July 10, 2018.

Rule No. 26 - Continued
COMMUNITY-BASED RENEWABLE ENERGY PROGRAM
PHASE 1

H. MICROGRIDS

1. Capitalized terms used in this section are as defined in Rule No. XX, Microgrid Services Tariff.

2. During Grid-Connected Mode, the Microgrid will be operated in parallel with the Company's System.

3. A Customer may operate its Generating Facility as part of a Customer Microgrid or be a participant in a Hybrid Microgrid.

4. A Customer who intends to operate its Generating Facility within a Customer Microgrid, or as a participant in a Hybrid Microgrid, shall notify the Company in its application through the Customer Interconnection Tool.

5. A Customer who operates its Generating Facility as part of a Microgrid after obtaining interconnection approval from the Company shall update its application through the Customer Interconnection Tool. Such notification and revision shall satisfy the Customer's notice requirements set forth in Tariff Rule 3B (Change in Customer's Equipment or Operations).

6. Customer Microgrids and Hybrid Microgrid Participants shall comply with the requirements of Rule No.XX, Microgrid Services Tariff, including Section H, Microgrid Operation.

~~5.~~

Rule No. 26 - Continued
COMMUNITY-BASED RENEWABLE ENERGY PROGRAM
PHASE 1

~~H.~~I. CBRE PROGRAM FACILITY SUBSCRIBER ORGANIZATION AGREEMENTS

1. Successful Subscriber Organizations (completed application process and is offered CBRE Program capacity) shall execute the SFC and Interconnection Agreement with the Company.

2. The SFC and Interconnection Agreement shall remain in effect for the Term set forth therein.

3. Subscriber Organizations shall pay fees as described in Sections D.2 and D.6 above.

4. Subscriber Organizations shall ensure CBRE Facilities are built within the specific number of months as specified in the SFC.

5. Subscriber Organizations are responsible for their own operation and maintenance of their facility to ensure the facility meets agreed performance warranties, per terms and conditions set forth in the Interconnection Agreement and Tariff Rule 14H.

6. Electric energy delivered to the Subscriber Organization by the Company shall be billed under the Company's applicable rate schedule. Electric energy delivered to the Subscriber Organization by the Company shall be metered separately from the electric energy delivered by the Subscriber Organization to the Company, either by use of multiple meters or a meter capable of separately recording the inflow and outflow of electricity. Electric energy generated by the CBRE Phase 1 Facility shall not be used to offset electric energy needs of the Facility itself so as to maximize the output of the Facility and the corresponding bill credits of the Subscribers to such Facility. Subscriber Organization will calculate and will be responsible for the accuracy of the Subscriber's monthly credit. The Subscriber's monthly credit will be provided by the Subscriber Organization to the Company in dollars, per Section C.4, no later than seven days after the end of each calendar month.

Order No. 35560; Filed June 29, 2018,
Transmittal Letter dated July 10, 2018.

Sheet No. 49R~~Q~~
Effective July 11, 2018

Rule No. 26 - Continued
COMMUNITY-BASED RENEWABLE ENERGY PROGRAM
PHASE 1

~~I.~~J. ALLOWED CBRE FACILITY DEVELOPMENT TIMEFRAME

1. Pre-Execution Requirements: Prior to execution of the SFC and Interconnection Agreement, CBRE Facilities must comply with the requirements of this CBRE Tariff and prove that the CBRE Facility is "shovel-ready'" and actively progressing towards completion. Company shall issue a written notice to the Subscriber Organization that will list all documentation that is required from the Subscriber Organization and/or any action that must be taken by the Subscriber Organization in order to comply with the CBRE Tariff. Unless otherwise expressly specified in an existing tariff, the Subscriber Organization shall have fifteen (15) business days from the date of such notice to submit the required documentation and/or provide evidence that the required action has been completed.

2. Commercial Operations Date: CBRE Phase 1 Facilities must be placed into operation within the timeframe specified in the SFC and measured from the Execution Date of the SFC. After completion of required testing by the Company, a Subscriber Organization will be permitted to commence commercial operations as of the first (1st) day of the month immediately following the Company's acceptance of the CBRE Phase 1 Facility.

Order No. 35560; Filed June 29, 2018,
Transmittal Letter dated July 10, 2018.

Rule No. 26 - Continued
COMMUNITY-BASED RENEWABLE ENERGY PROGRAM
PHASE 1

3. Removal of CBRE Facility from CBRE Program and Termination:

   a. Failure To Meet Pre-Execution Requirements or Post-Execution Requirements: Should a Subscriber Organization fail to comply with pre-execution (before execution of the Interconnection Agreement or SFC) requirements, the Subscriber Organization's Facility shall be subject to removal from the CBRE Program. Should a Subscriber Organization fail to meet post-execution requirements specified in the SFC or the Interconnection Agreement, the SFC and the Interconnection Agreement shall be subject to termination in accordance with the terms of the SFC, the Interconnection Agreement (as applicable) and this tariff rule. Company, with concurrence of the IO, shall notify the Subscriber Organization when a requirement has been missed or defaulted upon (after any applicable cure period) in accordance with the notice provisions under the SFC or the Interconnection Agreement. The Subscriber Organization shall have five (5) business days to provide proof that the Company and IO's determination was in error. If no response is received or if the proof is deemed insufficient by the Company and IO, the Subscriber Organization's Facility in question may be removed from the CBRE Program or the SFC and Interconnection Agreement may be terminated, as may be applicable, with notice to the Subscriber Organization, which termination shall be effective no earlier than thirty (30) days after such notice. Company shall provide a copy of such notice of termination to all Subscribers of such facility, the IO and the PUC. Concurrence of both the Company and the IO shall be required before a CBRE Facility can be removed from the CBRE Program or an SFC and Interconnection Agreement can be terminated. Upon removal of a CBRE Facility from the CBRE Program or termination of an SFC and Interconnection Agreement, any fees and security deposits paid to the Company by the Subscriber Organization for such Facility shall be forfeited.
   b. Failure To Meet Commercial Operation Date: Should a Subscriber Organization fail to place a CBRE Phase 1 Facility into operation within the timeframe specified in the SFC, the SFC (and Interconnection Agreement) may be terminated and any fees and security deposits paid to the Company by the Subscriber Organization will be forfeited all as specified in the SFC. If terminated by the Company, Subscriber Organization shall not retain its capacity and/or queue space in the CBRE Program once terminated. If the Subscriber Organization subsequently wishes to complete its CBRE Phase 1 Facility, the Subscriber Organization will be required to re-apply to be a Subscriber Organization under these tariff rules, subject to all requirements herein, including capacity limitations and payment of fees.

Order No. 35560; Filed June 29, 2018,
Transmittal Letter dated July 10, 2018.

Rule No. 26 - Continued
COMMUNITY-BASED RENEWABLE ENERGY PROGRAM
PHASE 1

4. Extensions For Good Cause: When extraordinary circumstances exist that may cause a Subscriber Organization to miss a pre-execution requirement, post-execution milestone or delay the completion of a CBRE Facility within the allowed Facility development timeframe, the Subscriber Organization may request an extension, not to exceed 90 days, of the applicable deadline. All requests for extensions must be made at the time of the event that necessitated the need for an extension. The Company and the IO may each unilaterally approve a request for an extension. A request for an extension may only be rejected by the joint approval of the Company and IO. To the extent that any delays are caused by the Company, a day-for-day extension of time for the period of the delay shall be granted to the affected CBRE Facility to comply with the applicable deadline.

5. Commission Oversight. The Commission shall have ultimate oversight over the CBRE Phase 1 Program. Material disputes unresolved after consultation with the IO may be presented to the Commission for review and the Commission may issue guidance and/or orders to resolve such disputes consistent with these tariff rules.

RULE NO. 27

Net Energy Metering Plus

A. ELIGIBLE CUSTOMER-GENERATOR

The Net Energy Metering Plus ("NEM+") Program is available to existing Eligible Customer- Generators under the Company's Net Energy Metering program (as described in Rule No. 18), that wish to add a non-exporting renewable energy system ("Non-Export Facility" or "Generating Facility") with or without an energy storage system or a standalone energy storage system, and where the following requirements are met:

1. The Non-Export Facility is located on the same premises as the Eligible Customer- Generator's existing Net Energy Metering generating facility ("NEM Facility").

2. The Non-Export Facility is sized and designed such that all of the Non-Export Facility's output is intended to serve on-site load at the Eligible Customer-Generator's premises.

3. The existing NEM Facility shall not be materially changed (e.g., increase in photovoltaic module wattage, additional photovoltaic modules, modified operation of the facility) without the prior written consent of the Company.

4. The existing NEM Facility will not export more than the original approved capacity of such NEM Facility.

5. The Non-Export Facility shall not export electric energy to the Company's electric system, except when permitted to provide Grid Support as set forth in Appendix II attached hereto.

6. The capacity of a Non-Export Facility that is comprised of more than a stand-alone energy storage system (e.g., Customer Self-Supply System) must be less than 100 kW (Capacity is defined as the sum of all inverter string capacities. The inverter string capacity is the lesser of the nominal inverter AC capacity or the nominal DC capacity for that inverter. The DC capacity is the sum of all generation (including energy storage systems) capacities connected to that inverter.).

7. The Non-Export Facility is in conformance with the Company's interconnection requirements provided in Rule No. 14, Paragraph H.

8. The Non-Export Facility shall be designed and configured to meet the Technical Specifications set forth in Appendix II attached hereto.

B. INTERCONNECTION AGREEMENT AND REQUIREMENTS

1. Eligible Customer-Generators shall complete and sign an application for service and a Standard Interconnection Agreement For Net Energy Metering Plus provided as Appendix I of this Rule ("Interconnection Agreement"), to receive NEM+ service, which shall not be effective until approved and executed by the Company. Where the Eligible Customer-Generator is not the person or entity in whose name electric service is rendered for the Eligible Customer-Generator's premises where the Generating Facility is located, i.e. where a landlord-tenant relationship exists, only the Eligible Customer- Generator shall be required to complete and sign the application for service and the Interconnection Agreement.

2. The Eligible Customer-Generator's existing Net Energy Metering Facility, to the extent materially changed, Non-Export Facility and associated interconnection systems must be in compliance with all applicable safety and performance standards of the National Electric Code (NEC), the Institute of Electrical and Electronic Engineers (IEEE), accredited testing laboratories such as Underwriters Laboratories (UL), the Company's interconnection requirements provided in Rule No. 14. Section H, Appendix I, and is subject to any other requirements provided in the Interconnection Agreement.

C. METERING AND BILLING

1. The Company, at its expense, may install advanced meter(s) to record the flow of electric power in each direction. The Eligible Customer-Generator shall, at its expense, provide, install and maintain all conductors, service switches, fuses, meter sockets, meter instrument transformer housing and mountings, switchboard meter test buses, meter panels and similar devices required for service connection and meter installations on the customer's premises in accordance with the Company's Rule No. 14, Section A.2.

2. Eligible Customer-Generators served under this tariff who also receive energy from the Company shall be billed monthly for the energy supplied by the Company, in accordance with the Company's Rule No. 8, the applicable rate schedule, and the Company's rules filed with the Commission.

3. Eligible Customer-Generators shall be billed for the kilowatt-hours supplied by the Company, and receive monetary credits for the kilowatt-hours produced by the Eligible Customer-Generator through its existing NEM Facility (together with any inadvertent export of the Non-Export Facility), in a manner consistent with the billing provisions of the Company's Rule No. 18, Section C.

4. All rates, terms, and conditions from the applicable rate schedule will apply.

5. Company's agreement to accept inadvertently exported electric power from the Generating Facility under this tariff is solely an accommodation. Neither this tariff nor the Interconnection Agreement provide for, require or otherwise obligate Company to measure, purchase, transmit, distribute, or store any electric power that may be delivered to Company's distribution system by Eligible Customer-Generator.

D. INTERCONNECTION PROCESS

1. Eligible Customer-Generator requests to interconnect and operate a Non-Export Facility in parallel with the Company's electric system will be processed in accordance with the procedures in the Interconnection Process Overview provided in Appendix III of Rule 14, Paragraph H. Non-Export Facilities comprised of more than a standalone energy storage system, e.g., battery storage, and that meet the Technical Specifications stated in Appendix II to this Rule shall qualify for expedited interconnection subject to the terms and conditions set forth in Company Rule 14, Section H, Appendix III. Non-Export Facilities comprised solely of an energy storage system shall not require an interconnection review by the Company.

2. Under no circumstances shall a Customer-Generator interconnect and operate a Non-Export Facility in parallel with the Company's electric system without prior written approval by the Company in the form of a fully executed Interconnection Agreement provided in Appendix I.

E. MICROGRIDS

1. Capitalized terms used in this section are as defined in Rule No. XX, Microgrid Services Tariff.

2. During Grid-Connected Mode, the Microgrid will be operated in parallel with the Company's System.

3. A Customer may operate its Generating Facility as part of a Customer Microgrid or be a participant in a Hybrid Microgrid.

4. A Customer who intends to operate its Generating Facility within a Customer Microgrid, or as a participant in a Hybrid Microgrid, shall notify the Company in its application through the Customer Interconnection Tool.

5. A Customer who operates its Generating Facility as part of a Microgrid after obtaining interconnection approval from the Company shall update its application through the Customer Interconnection Tool. Such notification and revision shall satisfy the Customer's notice requirements set forth in Tariff Rule 3B (Change in Customer's Equipment or Operations).

6. Customer Microgrids and Hybrid Microgrid Participants shall comply with the requirements of Rule No.XX, Microgrid Services Tariff, including Section H, Microgrid Operation.

~~2.~~

~~E.~~F. NON-APPLICABILITY OF NEM RULES AND STATUTE

The Net Energy Metering program was closed to new applications by the Hawai‘i Public Utilities Commission as of October 12, 2015 via Decision and Order No. 33258 in Docket No. 2014-0192. While the NEM+ program is available to existing NEM customers, participation under the NEM+ program and the terms of the Standard Interconnection Agreement For NEM+ provided as Appendix I of this Rule are not governed by Rule No. 18 (Net Energy Metering) or the provisions of Hawaii Revised Statutes, Chapter 269, Part VI, relating to Net Energy Metering, except to the limited extent expressly provided in Section C.3 of this Rule. Under no circumstances shall a Customer-Generator increase the name-plate size of its existing NEM Facility under this program.

~~F.~~G. APPLICATION CHARGE

Each Eligible Customer-Generator submitting an application for service under this tariff shall pay a one-time application charge of $50.00 unless such application is submitted electronically via the Company’s online Customer Interconnection Tool, in which case no application charge will be assessed.

ATTACHMENT 6

HAWAI‘I ISLAND

Proposed Modification to
DER Tariff Rules:

Rule No. 14H
Rule No. 18
Rule No. 22 - 27

RULE No. 14 (Continued)

Service Connections and Facilities on Customer's Premises

H. INTERCONNECTION OF DISTRIBUTED GENERATING FACILITIES WITH THE COMPANY'S DISTRIBUTION SYSTEM

1. Interconnection Standards

   a. Distributed generating facilities interconnected to the Company's electric system shall satisfy the Company's Interconnection Standards.

   b. The Company's Interconnection Standards are included as Appendix I to Rule 14.

2. Definitions

   For purposes of this Rule 14H, the following definitions shall apply:

   a. "Distributed Generation Facility": A Generating Facility located on a Customer's premises that is interconnected with the Distribution System.

   b. "Distribution System": All electrical wires, equipment and other facilities at the distribution voltage levels (such as 25kV-HECO only, 12kV, 4kV or 2.4kV) owned or provided by the utility, through which the utility provides electrical service to its customers.

   c. "Generating Facility": Customer or utility-owned electrical power generation that is interconnected to the utility.

   d. "Interconnect" or "interconnected" or "interconnection": The physical connection of any Distributed Generating Facility to the Distribution System, including the facilities required to provide the electric distribution service to a Customer, using electrical wires, switches, and related equipment located on either side of the point of common coupling as appropriate to their purpose and design to allow the physical connection of a Distributed Generating Facility to the Distribution System.

Docket No. 2014-0192; D&O No. 33258 filed October 12, 2015,
Transmittal Letter dated October 19, 2015.

e. "Momentary Parallel Operation": Parallel Operation for a duration less than 100 ms.

f. "Parallel operation": The operation of a Distributed Generating Facility, while interconnected, such that customer load can be fed by the Distributed Generating Facility and Distribution System simultaneously.

3. Interconnection Agreement

a. Customers, on whose premises Distributed Generating Facilities that are interconnected to the Company's Distribution System are located, shall complete and execute Standard Interconnection Agreement with the Company provided in Appendix II or Appendix II-A of this Rule, or an Application for Non-Export Distributed Generation Facilities (Momentary-Parallel Operation) provided in Appendix II-B of this Rule, or other Company-approved application for interconnection of a Generating Facility subject to Rule 14H, and obtain Company approval of such interconnection application prior to interconnecting the Distributed Generating Facilities to the Company's Distribution System, or within one hundred fifty (150) days after the effective date of this Rule if the distributed generating facilities are already operating in parallel with the Company's system as of such date, provided that following the expiration of such one hundred fifty (150) days period, Customers shall have thirty (30) days to file a request for an extension of such one hundred fifty (150) days period with the Commission for good cause shown. The Company shall not deem the Customer to be in violation of Rule 14H while the Customer's request for extension of time to complete and execute the Standard Interconnection Agreement is under consideration by the Commission. Nothing in this provision shall affect the Company's right to refuse or discontinue service as provided in Rules 7.A.1 and 2.

b. Distributed Generating Facilities may be interconnected to the Company's Distribution System in accordance with the terms and conditions of the Standard Interconnection Agreement or other interconnection agreement approved by the Company.

c. The Standard Interconnection Agreement does not apply when (1) the Customer enters into a power purchase agreement for the sale to the Company of electric energy generated by the Distributed Generating Facility, (2) the Customer enters into a standard agreement providing for net energy metering pursuant to Rule No. 18, (3) the customer submits an application for Non-Export Distributed Generation Facilities (Momentary-Parallel Operation) provided in Appendix II-B of this Rule or (4) the Customer enters into any other standard interconnection agreement for a Generating Facility that is governed by Rule 14H. A customer that has an executed interconnection agreement with the Company as of the effective date of this rule shall not be required to enter into the Standard Interconnection Agreement until such time as the existing interconnection agreement is terminated.

d. Customers with Distributed Generating Facilities that are eligible for net energy metering pursuant to Chapter 269 of the Hawaii Revised Statutes, shall follow the rules and requirements set forth in Rule No. 18 for Net Energy Metering and this Rule No. 14H, as applicable.

e. Distributed Generating Facilities that incorporate the use of an energy storage device, e.g. battery storage, shall obtain an interconnection review by the Company pursuant to this Rule 14H and satisfy the Company's Interconnection Standards.

f. With respect to any purported assignment of a Company-approved interconnection agreement due to a change in ownership of the related Generating Facility, the Company may permit a Customer-Generator or Owner/Operator, as applicable, to complete, execute and return to Company an Assumption of DER Interconnection Agreement in a form acceptable to Company in lieu of executing a new interconnection agreement.

~~Superseding Revised Sheet No. 38A-4~~
REVISED SHEET NO. 38A-44
~~Effective May 27, 2010~~
Effective ~~October 21, 2015~~Month Day, Year

4. Interconnection Process

a. Customer requests to interconnect Distributed Generating Facilities to the Company's Distribution System under the Standard Interconnection Agreement provided in Appendix II or Appendix II-A, or other Company-approved application for interconnection of a Generating Facility subject to this Rule, will be processed in accordance with the procedures in the Interconnection Process Overview, which is included in Appendix III of this Rule.

b. Distributed Generating Facilities that are interconnected but will not operate in parallel with the Company's Distribution System, are not subject to the interconnection review process under this Rule 14H except that Customer shall register such Distributed Generation Facilities by completing and submitting an Application for Non-Export Distributed Generation Facilities provided in Appendix II-B to this Rule 14H. Such registration shall satisfy the Customer's notice requirements set forth in Tariff Rule 3B (Change In Customer's Equipment Or Operations) and is required for purposes of determining potential load that the Company may be required to serve.

c. Generators that are not interconnected with the Company's Distribution System are not subject to the interconnection review process under this Rule 14H and are not required to be registered with the Company.

d. The Interconnection Process Overview addresses the steps in the interconnection process, the technical review process, the need for additional study, and the resolution of disputes.

5. MICROGRIDS

Docket No. 2014-0192; D&O No. 33258 filed October 12, 2015,
Transmittal Letter dated October 19, 2015.

~~Superseding Revised Sheet No. 38A-5~~
REVISED SHEET NO. 38A-5~~5~~
~~Effective May 27, 2010~~
Effective ~~October 21, 2015~~Month Day, Year

a. Capitalized terms used in this section are as defined in Rule No. XX, Microgrid Services Tariff.

b. During Grid-Connected Mode, the Microgrid will be operated in parallel with the Company's System.

c. A Customer may operate its Generating Facility as part of a Customer Microgrid or be a participant in a Hybrid Microgrid.

d. A Customer who intends to operate its Generating Facility within a Customer Microgrid, or as a participant in a Hybrid Microgrid, shall notify the Company in its application through the Customer Interconnection Tool.

e. A Customer who operates its Generating Facility as part of a Microgrid after obtaining interconnection approval from the Company shall update its application through the Customer Interconnection Tool. Such notification and revision shall satisfy the Customer's notice requirements set forth in Tariff Rule 3B (Change in Customer's Equipment or Operations).

f. Customer Microgrids and Hybrid Microgrid Participants shall comply with the requirements of Rule No.XX, Microgrid Services Tariff, including Section H, Microgrid Operation.

~~d.~~

Superseding Sheet No. 42
EffectiveMarch 20, 2008

REVISED SHEET NO. 42
Effective February 6, 2014
Proposed Changes: January 17, 2021

RULE NO. 18

Net Energy Metering

A. ELIGIBLE CUSTOMER-GENERATOR

Net energy metering is available to permanent customers who own (or lease from a third party) and operate (or contract to operate with a third party) a solar, wind turbine, biomass, or hydroelectric energy generating facility, or a hybrid system consisting of two or more of these facilities, with a capacity of not more than one hundred kilowatts (100 kW) or greater amount as approved by Commission rule or order, that is:

1. located on the customer's premises,
2. operated in parallel with the Company's transmission and distribution facilities,
3. in conformance with the Company's interconnection requirements provided in Rule 14, Section H, and
4. intended primarily to offset part or all of the customer's own electrical requirements.

B. NET ENERGY METERING AGREEMENT AND INTERCONNECTION REQUIREMENTS

1. Eligible Customer-Generator with a generating facility with a capacity of 10 kW or Less shall complete and sign a standard Net Energy Metering Agreement Form (10 kW or Less) provided in Appendix I of this Rule, to receive net energy metering service. The Net Energy Metering Agreement shall not be effective until approved and executed by the Company. The Customer-Generator facility and interconnection systems must be in compliance with all applicable safety and performance standards of the National Electric Code (NEC), the Institute of Electrical and Electronic Engineers (IEEE), accredited testing laboratories such as Underwriters Laboratories (UL), and with Rule 14, Section H, Appendix I.

2. Eligible Customer-Generator with a generating facility with a capacity greater than 10 kW but not exceeding 100 kW shall complete and sign a standard Net Energy Metering and Interconnection Agreement (Greater than 10 kW But Less Than or Equal to 100 kW) provided in Appendix II of this Rule. The Net Energy Metering Agreement shall not be effective until approved and executed by the Company. The Customer-Generator facility and interconnection systems must be in compliance with all applicable safety and performance standards of the National Electric Code (NEC), the Institute of Electrical and Electronic Engineers (IEEE), accredited testing laboratories such as Underwriters Laboratories (UL), the Company’s interconnection requirements provided in Rule 14, Section H, Appendix I, and subject to any other requirements provided in the standard Net Energy Metering and Interconnection Agreement.

Decision and Order No. 31901; Filed January 31, 2014.
Transmittal Letter Dated February 6, 2014.

RULE NO. 18 – Continued

Net Energy Metering

C. METERING AND BILLING

1. The Company, at its expense, may install meter(s) to record the flow of electric power in each direction. The customer shall, at its expense, provide, install and maintain all conductors, service switches, fuses, meter sockets, meter instrument transformer housing and mountings, switchboard meter test buses, meter panels and similar devices required for service connection and meter installations on the customer's premises in accordance with the Company's Rule 14, Section A.2.

2. Customers with Net Energy Metering service shall be billed monthly for the billing period, in accordance with the Company's Rule 8. Every 12 months, a reconciliation of the customer's net energy consumption supplied by the Company with the net energy produced by the Eligible Customer-Generator generating facility for that 12-month period will be performed as described in Section C.5.

   For customers with existing Net Energy Metering service, the measurement of kilowatthours supplied by the Company and the kilowatthours produced by the Eligible Customer-Generator for the first bill of the initial 12-month period under 2005 Haw. Sess. Laws Act 104 (effective July 1, 2005) shall begin at the start date of the billing period following the effective date of this tariff. For all other customers requesting Net Energy Metering service, the measurement of kilowatthours supplied by the Company and the kilowatthours produced by the Eligible Customer-Generator for the first bill of the initial 12-month period shall begin on the start date of the first billing period after the installation of the required meter(s).

3. When the electricity produced by the Eligible Customer-Generator generating facility during a billing period exceeds the electricity supplied by the Company for the same period, the customer is deemed to be a net electricity producer.

Docket No. 05-0037, D&O No. 22313 Dated March 9, 2006,
Transmittal Letter Dated March 16, 2006.

RULE NO. 18 – Continued

Net Energy Metering

In a billing period when the customer is deemed to be a net electricity producer, the customer will not be billed for the kilowatthours supplied by the Company during that billing period. For billing purposes, the customer shall instead be charged the Minimum Charge provided in the applicable rate schedule in effect during the billing period.

The excess kilowatthours produced by the Eligible Customer-Generator in each billing period, shall be carried over to the next billing period(s) within the current 12-month period, as a monetary credit and applied only to the Energy Charge, plus adjustments applicable to the Energy Charge, as well as adjustments based on kWh consumption, if any, for the customer's net kilowatthour consumption in the succeeding billing period within the current 12-month period. Adjustments applicable to the Energy Charge include the Power Factor Adjustment, the Supply Voltage Delivery Adjustment, the IRP Cost Recovery Adjustment, and other similar adjustments applicable to the Energy Charge that are in effect. Adjustments based on kWh consumption include the Energy Cost Adjustment, the Residential DSM Adjustment, the Commercial & Industrial DSM Adjustment, and other similar adjustments based on kWh consumption that are in effect. When the customer is billed the Minimum Charge in any billing period, the customer's cumulative net monetary credit shall <u>not</u> be applied to the Minimum Charge.

The customer's cumulative net monetary credit shall also not be applied to the Demand Charge, Customer Charge, adjustments applicable to the Demand and Customer Charges and other similar rate adjustments applicable to the Demand and Customer Charges that are in effect.

a. For customers served under Schedule R, the monetary credit for the excess kilowatthours produced by the Eligible Customer-Generator shall be calculated by multiplying the number of excess kilowatthours produced by the Eligible Customer-Generator by the Energy Charge (i.e., Non-Fuel Energy Charge plus the Base Fuel Energy Charge) provided in Schedule R, plus the adjustments applicable to the Energy Charge and the adjustments based on kWh consumption.

Docket No. 05-0037, D&O No. 22313 Dated March 9, 2006,
Transmittal Letter Dated March 16, 2006.

RULE NO. 18 – Continued

Net Energy Metering

b. For customers served under Schedule G, the monetary credit for the excess kilowatthours produced by the Eligible Customer-Generator shall be calculated by multiplying the excess kilowatthours produced by the Eligible Customer-Generator by the Energy Charge provided in Schedule G plus the adjustments applicable to the Energy Charge and the adjustments based on kWh consumption.

c. For customers served under the rate schedules with load-factor block energy rates, such as Schedule J, including those customers served under the load management Riders T, M, and I the monetary credit for the excess kilowatthours produced by the Eligible Customer-Generator shall be calculated by multiplying the excess kilowatthours produced by the Eligible Customer-Generator by the weighted average energy rate of the applicable rate schedule effective during the billing period, plus the adjustments applicable to the Energy Charge and the adjustments based on kWh consumption.

d. For customers served under Schedule U, the monetary credit for the excess kilowatthours produced by the Eligible Customer-Generator shall be calculated by multiplying the excess kilowatthours produced by the Eligible Customer-Generator by the weighted average energy rate of Schedule P, plus adjustments applicable to the Energy Charge and the adjustments bsed on kWh consumption.

e. For customers served under the load management riders such as Rider T which provides energy rate adjustments to the Energy Charge in the applicable rate schedule, the customer’s net monetary credit, if any, shall be applied to the customer’s Energy Charge including the Energy Charge in the applicable rate schedule and the energy rate adjustments provided in the Rider, plus the adjustments applicable to the Energy Charge and the adjustments based on kWh consumption.

4. When the electricity supplied by the Company to the customer during a billing period exceeds the electricity produced by the Eligible Customer-Generator generating facility for the same period, and also exceeds any unused

Docket No. 05-0037, D&O No. 22313 Dated March 9, 2006,
Transmittal Letter Dated March 16, 2006.

cumulative credits for excess electricity supplied by the Eligible Customer-Generator carried over from the prior months since the last 12-month

reconciliation period, the customer is deemed to be a net electricity consumer.

For billing purposes, the customer shall be charged for the excess kilowatthours supplied by the Company based on the applicable rate schedule in effect during the billing period. The payment for excess kilowatthours supplied by the Company, however, will take into consideration any unused cumulative credits to the extent provided for in Section C.3. of this Rule 18.

In a billing period in which the customer is deemed to be a net electricity consumer, the customer will also be billed for other applicable charges, base rate adjustments and non-base rate adjustments, to the extent the amount exceeds the Minimum Charge; if such amount does not exceed the Minimum Charge, the customer will be billed the Minimum Charge, plus any rate adjustment that may apply to the Minimum Charge.

5. The kilowatthours supplied by the Company and the kilowatthours produced by the Eligible Customer-Generator for each billing period shall be recorded in each billing period of the 12-month period. Coincident with the last bill of the 12-month period following the start date of the customer's billing under the net energy metering contract, and for each 12-month period thereafter, the (i) Energy Charge plus adjustments applicable to the Energy Charge and adjustments based on kWh consumption, less any monetary credits applied during the 12-month period for net kilowatthours produced by the Eligible Customer-Generator ("Remaining Energy Charge Balance"), and (ii) the available cumulative credit balance (i.e., cumulative net monetary credit for net kilowatthours produced by the Eligible Customer-Generator for the 12-month period remaining after the subtraction of the monetary credits previously credited to the customer during the 12-month period for net kilowatthours produced by the Eligible Customer-Generator) will be compared to determine whether the customer is entitled to a refund of remaining Energy Charges plus adjustments to the Energy Charge and adjustments based on kWh consumption. If the available cumulative credit balance equals, or exceeds

the Remaining Energy Charge Balance, the Remaining Energy Charge Balance will be refunded. If the Remaining Energy Charge Balance is greater than the available cumulative credit balance at the end of the 12-month period, the

amount of the refund will be capped at the available cumulative credit balance.

The Energy Charge shall include the customer's Energy Charge for each billing period within the 12-month period, plus adjustments applicable to the Energy Charge and adjustments based on kWh consumption, except for those billing periods when the customer was billed the Minimum Charge provided in the applicable rate schedule. Any monetary credits for excess kilowatthours produced by the Eligible Customer-Generator that remain unused at the end of each 12-month period shall expire and not be carried over to the next 12-month period. The customer shall not be compensated for such excess kilowatthours produced by the Eligible Customer-Generator unless the Company enters into a purchase power agreement with the Eligible Customer-Generator.

If an Eligible Customer-Generator terminates its Net Energy Metering service under Rule 18 prior to the end of any 12-month period, the Company shall reconcile the Energy Charge, plus adjustments applicable to the Energy Charge and adjustments based on kWh consumption, less monetary credits previously applied, to the cumulative credit balance at the end of the billing period when service was terminated, similar to the reconciliation that would have been performed at the end of the normal 12-month period.

6. The kilowatthours supplied by the Company and, if any, the kilowatthours produced by the Eligible Customer-Generator, including an accounting of the cumulative monetary credits for the excess kilowatthours produced by the Eligible Customer-Generator since the last 12-month period reconciliation, the credits applied in each billing period of the current 12-month period and the remaining unused credits, if any, will be included in the customer's regular billing statement.

D. MAXIMUM NET ENERGY METERING CAPACITY

Net energy metering will be made available to customers on a first come first serve basis, and until the sum of the total rated generating capacity of all net metered customer facilities equals approximately 4.0% of the Company's current system peak demand or different level as approved by Commission rule or

order, with 30% of the 4.0% system peak demand reserved for eligible Customer-Generators with a generator capacity size of 10 kW or less.

E. INTERCONNECTION PROCESS

1. Eligible Customer-Generator requests to interconnect and operate a generating facility in parallel with the Company's electric system will be processed in accordance with the procedures in the Interconnection Process Overview provided in Appendix III of this Rule. Under no circumstances shall a Customer-Generator interconnect and operate a generating facility in parallel with the Company's electric system without prior written approval by the Company in the form of a fully executed Net Energy Agreement.

2. Generating facilities that incorporate the use of an energy storage device, e.g. battery storage, regardless of whether such energy storage device is intended to operate in parallel with the Company's transmission and/or distribution facilities, shall obtain an interconnection review by the Company pursuant to this Rule.

3. Energy storage systems that are intended to be installed by an Eligible Customer-Generator after Company's execution of a Net Energy Metering Agreement shall constitute a material change and addition to a generating facility and shall require interconnection review pursuant to this Rule prior to installation.

4. The Interconnection Process Overview addresses the steps in the interconnection process, the technical review process, the need for additional study, and the resolution of the disputes.

F. MICROGRIDS

1. Capitalized terms used in this section are as defined in Rule No. XX, Microgrid Services Tariff.

2. During Grid-Connected Mode, the Microgrid will be operated in parallel with the Company's System.

3. A Customer may operate its Generating Facility as part of a Customer Microgrid or be a participant in a Hybrid Microgrid.

Decision and Order No. 31901; Filed January 31, 2014.
Transmittal Letter Dated February 6, 2014.

RULE NO. 18 – Continued

Net Energy Metering

4. A Customer who intends to operate its Generating Facility within a Customer Microgrid, or as a participant in a Hybrid Microgrid, shall notify the Company in its application through the Customer Interconnection Tool.

5. A Customer who operates its Generating Facility as part of a Microgrid after obtaining interconnection approval from the Company shall update its application through the Customer Interconnection Tool. Such notification and revision shall satisfy the Customer's notice requirements set forth in Tariff Rule 3B (Change in Customer's Equipment or Operations).

6. Customer Microgrids and Hybrid Microgrid Participants shall comply with the requirements of Rule No.XX, Microgrid Services Tariff, including Section H, Microgrid Operation.

Decision and Order No. 31901; Filed January 31, 2014.
Transmittal Letter Dated February 6, 2014.

Superseding Sheet No. 47
Effective August 18, 2016

REVISED SHEET NO. 47
Effective February 5, 2018
Proposed Changes: January 17, 2021

Rule No. 22

CUSTOMER SELF-SUPPLY

A. ELIGIBLE CUSTOMER-GENERATOR

Customer Self-Supply service is available to permanent customers ("Eligible Customer-Generator") who own (or lease from a third party) and operate (or contract to operate with a third party) a solar generating facility ("Generating Facility" or "Self-Supply System"), with a capacity of not more than one hundred kilowatts (100 kW), and where:

1. The Generating Facility, which may include an energy storage system, is located on the Eligible Customer-Generator's premises,

2. The Generating Facility is sized and designed such that all of the Generating Facility's output is intended to offset all or part of the Eligible Customer-Generator's own electrical requirements ("Host Load"),

3. The Eligible Customer-Generator does not intend to export electrical energy to the utility system, except when permitted to provide Grid Support as set forth in Appendix II attached hereto,

4. The Generating Facility is in conformance with the Company's interconnection requirements provided in Rule No. 14, Paragraph H, and

5. The Generating Facility shall be designed and configured to meet the Technical Specifications set forth in Appendix II attached hereto.

B. INTERCONNECTION AGREEMENT AND REQUIREMENTS

1. Eligible Customer-Generator shall complete and sign an application for service and a Standard Interconnection Agreement For Self-Supply Systems (100 kW or less) provided as Appendix I of this Rule ("Interconnection Agreement"), to receive Customer Self-Supply service, which shall not be effective until approved and executed by the Company. Where the Eligible Customer-Generator is not the person or entity in whose name electric service is rendered for the Eligible Customer-Generator's premises where the Generating Facility is located, i.e. where a landlord-tenant relationship exists, only the Eligible Customer-Generator shall be required to complete and sign the application for service and the Interconnection Agreement.

2. The Eligible Customer-Generator's Generating Facility and interconnection systems must be in compliance with all applicable safety and performance standards of the National Electric Code (NEC), the Institute of Electrical and Electronic Engineers (IEEE), accredited testing laboratories such as Underwriters Laboratories (UL), the Company's interconnection requirements provided in Rule No. 14. Section H, Appendix I, and is subject to any other requirements provided in the Interconnection Agreement.

Rule No. 22 - Continued

CUSTOMER SELF-SUPPLY

C. METERING AND BILLING

1. The Company, at its expense, may install meter(s) to record the flow of electric power in each direction. The Eligible Customer-Generator shall, at its expense, provide, install and maintain all conductors, service switches, fuses, meter sockets, meter instrument transformer housing and mountings, switchboard meter test buses, meter panels and similar devices required for service connection and meter installations on the customer's premises in accordance with the Company's Rule No. 14, Section A.2.

2. Eligible Customer-Generators served under this tariff who also receive energy from the Company shall be billed monthly for the energy supplied by the Company, in accordance with the Company's Rule No. 8, the applicable rate schedule, and the Company's rules filed with the Commission.

3. All rates, terms, and conditions from the applicable rate schedule will apply.

4. Company's agreement to accept inadvertently exported electric power from the Generating Facility under this tariff is solely an accommodation. Neither this tariff nor the Interconnection Agreement provide for, require or otherwise obligate Company to measure, purchase, transmit, distribute, or store any electric power that may be delivered to Company's distribution system by Eligible Customer-Generator.

D. INTERCONNECTION PROCESS

1. Eligible Customer-Generator requests to interconnect and operate a Generating Facility in parallel with the Company's electric system will be processed in accordance with the procedures in the Interconnection Process Overview provided in Appendix III of Rule 14, Paragraph H. Generating Facilities that meet the Technical Specifications stated in Appendix II to this Rule shall qualify for expedited interconnection subject to the terms and conditions set forth in Company Rule 14, Section H, Appendix III.

2. Under no circumstances shall a Customer-Generator interconnect and operate a Generating Facility in parallel with the Company's electric system without prior written approval by the Company in the form of a fully executed Interconnection Agreement.

SHEET NO. 47B
Effective Month Day, Year

Rule No. 22 - Continued

CUSTOMER SELF-SUPPLY

~~2.~~

E. MICROGRIDS

1. Capitalized terms used in this section are as defined in Rule No. XX, Microgrid Services Tariff.

2. During Grid-Connected Mode, the Microgrid will be operated in parallel with the Company's System.

3. A Customer may operate its Generating Facility as part of a Customer Microgrid or be a participant in a Hybrid Microgrid.

4. A Customer who intends to operate its Generating Facility within a Customer Microgrid, or as a participant in a Hybrid Microgrid, shall notify the Company in its application through the Customer Interconnection Tool.

5. A Customer who operates its Generating Facility as part of a Microgrid after obtaining interconnection approval from the Company shall update its application through the Customer Interconnection Tool. Such notification and revision shall satisfy the Customer's notice requirements set forth in Tariff Rule 3B (Change in Customer's Equipment or Operations).

6. Customer Microgrids and Hybrid Microgrid Participants shall comply with the requirements of Rule No.XX, Microgrid Services Tariff, including Section H, Microgrid Operation.

Superseding Sheet No. 49
Effective October 21, 2015

REVISED SHEET NO. 49
Effective June 13, 2016
Proposed Changes: January 17, 2021-

Rule No. 23

CUSTOMER GRID SUPPLY

A. AVAILABILITY FOR CUSTOMER-GENERATORS

Customer Grid-Supply service is available to Eligible Customer-Generators who own or lease from a third party and operate or contract to operate with a third party a solar, wind turbine, biomass, or hydroelectric energy generating facility, or a hybrid system consisting of two or more of these facilities ("Generating Facility" or "Grid-Supply System"), with a capacity of not more than one hundred kilowatts (100 kW) and where:

1. The Generating Facility, which may include an energy storage system, is located on the Eligible Customer-Generator's premises,

2. The Generating Facility will be operated in parallel with the Company's transmission and distribution facilities,

3. The Generating Facility is in conformance with the Company's interconnection requirements provided in Rule No. 14, Paragraph H.

4. The Generating Facility is sized and designed such that all of the Generating Facility's output is intended to offset all or part of the Eligible Customer-Generator's own electrical requirements ("Host Load")

B. GRID SUPPLY INTERCONNECTION AGREEMENT

1. Eligible Customer-Generator shall complete and sign an application for service and a standard Grid-Supply Interconnection Agreement (100 kW or less) provided as Appendix I of this Rule ("Interconnection Agreement"), to receive Grid-Supply service. Where the Eligible Customer-Generator is not the person or entity in whose name electric service is rendered for the Eligible Customer-Generator's premises where the Generating Facility is located, i.e. where a landlord-tenant relationship exists, only the Eligible Customer-Generator shall be required to complete and sign the application for service and the Interconnection Agreement.

2. The Eligible Customer-Generator's Generating Facility and interconnection systems must be in compliance with all applicable safety and performance standards of the National Electric Code (NEC), the Institute of Electrical and Electronic Engineers (IEEE), accredited testing laboratories such as Underwriters Laboratories (UL), the Company's interconnection requirements provided in Rule No. 14. Section H, and is subject to any other requirements provided in the Interconnection Agreement.

Superseding Revised Sheet No. 49A
Effective June 13, 2016

REVISED SHEET NO. 49A
Effective November 1, 2020

Rule No. 23

CUSTOMER GRID SUPPLY – Continued

C. METERING AND BILLING

1. The Company, at its expense, may install meter(s) to record the flow of electric power in each direction. The Eligible Customer-Generator shall, at its expense, provide, install and maintain all conductors, service switches, fuses, meter sockets, meter instrument transformer housing and mountings, switchboard meter test buses, meter panels and similar devices required for service connection and meter installations on the customer's premises in accordance with the Company's Rule No. 14, Section A.2.

2. Eligible Customer-Generators served under this tariff who also receive energy from the Company shall be billed monthly for the energy supplied by the Company, in accordance with the Company's Rule No. 8, the applicable rate schedule, and the Company's rules filed with the Commission.

3. All rates, terms, and conditions from the applicable rate schedule will apply.

4. The measurement of the kWh supplied by the Company to the Customer-Generator and the kWh received by the Company from the Customer shall begin on the date of installation of the required meter(s) or Company's approval to interconnect the Generating Facility, whichever comes later. Each subsequent billing month shall represent the Customer-Generator's reconciliation period.

5. All kWh received by the Company from the Eligible Customer-Generator shall be assigned Energy Credits. The Energy Credits for the billing period shall be calculated as the applicable Energy Credit Rate multiplied by the energy received by the Company from the Customer-Generator during the billing period, or the energy delivered by the Company to the Customer-Generator, whichever is less. The applicable Energy Credit Rates for each rate schedule shall be as follows:

Docket No. 2018-0368; Decision and Order No. 37237 filed on July 28, 2020.
Transmittal Letter dated August 27, 2020.

Superseding Sheet No. 49B
Effective June 13, 2016

REVISED SHEET NO. 49B
Effective February 05, 2018

Rule No. 23

CUSTOMER GRID SUPPLY – Continued

Energy Credit Rates for Each Applicable Rate Schedule:

Schedule R, TOU-R, TOU EV	15.14 cents per kWh
Schedule G, TOU-G	15.14 cents per kWh
Schedule J, TOU-J, U, SS, EV-F	15.14 cents per kWh
Schedule P	15.14 cents per kWh
Schedule F	15.14 cents per kWh

Energy Credit Rates shall be fixed at the above through October 20, 2022. Thereafter, the applicable Energy Credit Rates shall be subject to any future modification by the Commission.

In each billing period, the Eligible Customer-Generator's available Energy Credits shall be applied against the total of the electric bill calculated under the applicable rate schedule for the energy delivered by the Company to the Customer-Generator in the billing period. Such Energy Credits applied shall appear as a separate line item on the customer bill. Application of Energy Credits may only reduce the electric bill to an amount equal to the minimum charge for the applicable rate schedule.

6. Any Energy Credits that are not applied in each billing period shall be forfeited.

D. INTERCONNECTION PROCESS

1. Eligible Customer-Generator requests to interconnect and operate a Generating Facility in parallel with the Company's electric system will be processed in accordance with the procedures in the Interconnection Process Overview provided in Appendix III of Rule 14, Paragraph H.

2. Under no circumstances shall a Customer-Generator interconnect and operate a Generating Facility in parallel with the Company's electric system without prior written approval by the Company in the form of a fully executed Interconnection Agreement.

~~2.~~

E. MICROGRIDS

1. Capitalized terms used in this section are as defined in Rule No. XX, Microgrid Services Tariff.

2. During Grid-Connected Mode, the Microgrid will be operated in parallel with the Company's System.

3. A Customer may operate its Generating Facility as part of a Customer Microgrid or be a participant in a Hybrid Microgrid.

4. A Customer who intends to operate its Generating Facility within a Customer Microgrid, or as a participant in a Hybrid Microgrid, shall notify the Company in its application through the Customer Interconnection Tool.

5. A Customer who operates its Generating Facility as part of a Microgrid after obtaining interconnection approval from the Company shall update its application through the Customer Interconnection Tool. Such notification and revision shall satisfy the Customer's notice requirements set forth in Tariff Rule 3B (Change in Customer's Equipment or Operations).

6. Customer Microgrids and Hybrid Microgrid Participants shall comply with the requirements of Rule No.XX, Microgrid Services Tariff, including Section H, Microgrid Operation.

Rule No. 24

CUSTOMER GRID SUPPLY PLUS

A. AVAILABILITY FOR CUSTOMER-GENERATORS

Customer Grid-Supply Plus service is available to Eligible Customer-Generators who own or lease from a third party and operate or contract to operate with a third party a solar, wind turbine, biomass, or hydroelectric energy generating facility, or a hybrid system consisting of two or more of these facilities ("Generating Facility"), with a capacity of not more than one hundred kilowatts (100 kW) and where:

1. The Generating Facility which may include an energy storage system, is located on the Eligible Customer-Generator's premises,

2. The Generating Facility will be operated in parallel with the Company's transmission and distribution facilities,

3. The Generating Facility is in conformance with the Company's interconnection requirements provided in Rule No. 14, Paragraph H, the requirements of this tariff and the Grid Supply Plus Interconnection Agreement, and

4. The Generating Facility is sized and designed such that all of the Generating Facility's output is intended to offset all or part of the Eligible Customer-Generator's own electrical requirements ("Host Load").

B. GRID SUPPLY INTERCONNECTION AGREEMENT

1. Eligible Customer-Generator shall complete and sign an application for service and a standard Grid-Supply Plus Interconnection Agreement (100 kW or less) provided as Appendix I of this Rule ("Interconnection Agreement"), to receive service under this tariff. Where the Eligible Customer-Generator is not the person or entity in whose name electric service is rendered for the Eligible Customer-Generator's premises where the Generating Facility is located, i.e. where a landlord-tenant relationship exists, only the Eligible Customer-Generator shall be required to complete and sign the application for service and the Interconnection Agreement.

Rule No. 24

CUSTOMER GRID SUPPLY PLUS – Continued

2. The Eligible Customer-Generator's Generating Facility and interconnection systems must be in compliance with all applicable safety and performance standards of the National Electric Code (NEC), the Institute of Electrical and Electronic Engineers (IEEE), accredited testing laboratories such as Underwriters Laboratories (UL), the Company's interconnection requirements provided in Rule No. 14. Section H, and is subject to any other requirements provided in the Interconnection Agreement.

C. METERING AND BILLING

1. The Company, at its expense, may install meter(s) to record the flow of electric power in each direction. The Eligible Customer-Generator shall, at its expense, provide, install and maintain all conductors, service switches, fuses, meter sockets, meter instrument transformer housing and mountings, switchboard meter test buses, meter panels, and similar devices required for service connection and meter installation and operation on the customer's premises in accordance with the Company's Rule No. 14, Section A.2.

Rule No. 24

CUSTOMER GRID SUPPLY PLUS – Continued

2. Eligible Customer-Generators served under this tariff who also receive energy from the Company shall be billed monthly for the energy supplied by the Company, in accordance with the Company's Rule No. 8, the applicable rate schedule, and the Company's rules filed with the Commission.

3. All rates, terms, and conditions from the applicable rate schedule will apply.

4. The measurement of the kWh supplied by the Company to the Customer-Generator and the kWh received by the Company from the Customer-Generator shall begin on the date of installation of the required meter(s) or Company's approval to interconnect the Generating Facility, whichever comes later. For each billing period, the kWh received by the Company shall be assigned to kWh credits applied to calculate the current bill ("Credits Applied") and/or to kWh credits carried over to the future billing period(s) within the current 12-month period ("Banked Credits"). The Company shall assign to kWh Credits Applied the amount of kWh received up to the amount of the kWh supplied by the Company. Any kWh received by the Company in excess of the kWh supplied by the Company shall be added to kWh Banked Credits. The balance of kWh Banked Credits shall be reduced by any kWh Banked Credits Applied, which are described below.

Rule No. 24

CUSTOMER GRID SUPPLY PLUS – Continued

5. The applicable Energy Credit Rates for each rate schedule shall be as follows:

Energy Credit Rates for Each Applicable Rate Schedule:

Schedule R, TOU-RI, TOU-R, TOU EV	10.55 cents per kWh daily
Schedule G, TOU-G	10.55 cents per kWh daily
Schedule J, TOU-J, U, SS, EV-F	10.55 cents per kWh daily
Schedule P	10.55 cents per kWh daily
Schedule F	10.55 cents per kWh daily

Energy Credit Rates shall be fixed at the above levels through October 20, 2022. Thereafter, the applicable Energy Credit Rates shall be subject to modification by the Commission.

6. The Energy Credits for the billing period shall be calculated as the applicable Energy Credit Rate multiplied by the sum of kWh Credits Applied plus kWh Banked Credits Applied. Such Energy Credits shall appear as a separate line item on the customer bill. When the kWh supplied by the Company exceeds the kWh received by the Company, kWh Banked Credits Applied is the amount of the kWh Banked Credits that is included in the calculation of Energy Credits to reduce the Customer-Generator's electric bill calculated under the applicable rate schedule for the energy delivered by the Company to the Customer-Generator in the billing period. Application of Energy Credits may only reduce the electric bill to an amount equal to the minimum charge for the applicable rate schedule, plus any surcharges that are applicable in addition to the minimum charge.

7. A reconciliation will be made every 12 months for the customer's energy supplied by the Company with the energy received by the Company from the Eligible Customer-Generator's generating facility. This reconciliation will be performed as follows:

The kilowatthours supplied by the Company and the kilowatthours produced by the Eligible Customer-Generator shall be recorded for 12 billing periods. Coincident with the twelfth bill following the start of the grid supply plus contract and each 12-month period thereafter, the Eligible kWh shall be determined as the lesser of the kWh supplied to the Eligible Customer-Generator or the kWh received from the Eligible Customer-Generator over the 12-month period. Credited kWh shall be defined as the sum of kWh Credits Applied plus kWh Banked Credits Applied over the 12-month period. A Reconciliation Bill Credit shall be applied if the Eligible kWh is greater than the Credited kWh, and shall be calculated as the Energy Credit Rate multiplied by the difference between the Eligible kWh and the Credited kWh. If the Credited kWh is greater than or equal to the Eligible kWh, then there is no Reconciliation Bill Credit. At the time of the reconciliation, the balance of the kWh Banked Credits is set to zero for the next 12 month period.

If an Eligible Customer-Generator terminates its Customer Grid Supply Plus service under this tariff prior to the end of any 12-month period, the Company shall reconcile the customer's energy supplied by the Company with the energy produced by the Eligible Customer-Generator generating facility in the same manner as the reconciliation that would have been performed at the end of the normal 12-month period.

The kilowatthours supplied by the Company and the kilowatthours received from the Eligible Customer-Generator, including an accounting of the kWh Credits Applied, kWh Banked Credits, and kWh Banked Credits Applied in each billing period of the current 12-month period will be included in the customer's regular billing statement.

D. COMMUNICATIONS AND CONTROLLABILITY

Subject to the Communications and Controls requirements set forth in this Paragraph D, ~~T~~the Customer-Generator may elect to either: (1) have the Company install a separate smart production meter to be owned, installed or operated by the Company in which case the Company shall be responsible for the cost of metering and control of the Customer-Generator's Generating Facility (the "Smart Meter Option"); or (2) contract separately with a third-party aggregator, where the Company will accept aggregated data from such aggregators that can meet the Company's technical requirements for reliability of data collection and provision to the Company consistent with Section 8.f of Appendix I to this Rule No. 24 (the "Aggregator Option"). A Customer-Generator who elects the Aggregator Option shall be responsible for the costs of contracting with the third-party aggregator.

Whether the Smart Meter Option or the Aggregator Option is elected by the Customer-Generator, the Company shall be able to remotely measure, monitor, evaluate and verify technical compliance, Generating Facility performance, and power quality and, if necessary, control the Generating Facility ("Communication and Controls"). The Communication and Controls shall include monitoring of: (a) gross generation by the generating facility; (b) feedback of Watts, Vars, WattHours, current and voltage; and (c) if available, connection status of the Generating Facility, frequency, and operational state of charge (i.e., 0% to 100% of operational energy storage capacity). The acceptable method(s) of implementing and satisfying the Communication and Controls requirements may include cellular or other comparable technology.

Customer-Generators with single-phase Generating Facilities with a system size rating less than or equal to 175 Amps opting for the Smart Meter Option to satisfy the Communication and Controls requirement will be required to install a meter socket with line terminals wired to an acceptable location on the load side of the production meter or customer generator disconnect switch and load terminals wired to the power output terminals of the generator.

Rule No. 24

CUSTOMER GRID SUPPLY PLUS – Continued

Customer-Generators with single-phase Generating Facilities with a system size rating greater than 175 Amps or three-phase Generating Facilities of any size opting for the Smart Meter Option to satisfy the Communication and Controls requirement will be required to install a meter socket compatible with a form 2s meter. The line terminals of the meter socket shall be wired to an acceptable location on the load side of the utility revenue meter and the load terminals shall be wired to the control voltage terminal of a definite purpose contactor. The definite purpose contactor shall have normally open contacts rated appropriately for the Generating Facility design and installed with terminals connected to the power output terminals of the generator and the Customer Generator System Disconnect switch.

With respect to the Smart Meter Option, the LTE cellular connectivity and throughput speed will be measured pre-deployment by utilizing built in software toolkits with Verizon LTE mobile devices. LTE connectivity will be deemed acceptable using either a bandwidth test or a signal strength test. The bandwidth test does not indicate the minimum throughput required for the operation of the Smart Meter Option and is only used to determine acceptable connectivity. The minimum acceptable bandwidth requirement for connectivity testing shall be 1.0 Mbps download and 0.5 Mbps upload. Should the site fail the bandwidth test, a signal strength test will be performed and shall be deemed acceptable with minimum readings of -110 dBm RSRP and an RSRQ of -12 dB or better. Lower signal strength values are considered marginal and may result in lower performance which can be verified by testing the meter on-site. For example, -120 dBm is a lower signal strength measurement than -110 dBm. As necessary, utility personnel will determine and record official cellular connectivity tests prior to the installation and operation of the smart production meter at production meter socket location indicated on the site plan included with the application. Furthermore, once the meter installation is completed, utility personnel will verify the meter is successfully communicating with the Verizon Grid Wide platform.

Customer-Generators whose geographic location, or other variable, prevents the Customer-Generator from meeting the foregoing minimum cellular connectivity requirements ("Outlying Customer-Generators") shall not be precluded from participating in the Customer Grid Supply Plus Program. In such case, the Company shall utilize non-cellular alternatives to establish the connectivity levels sufficient to implement and satisfy the Communications and Controls requirements, to the extent such alternatives are available and acceptable, as determined by the Company ("Non-Cellular Alternatives").

If the Company's remote control of an Outlying Customer-Generator's Generating Facility cannot be established through Non-Cellular Alternatives, the Outlying Customer-Generator shall install at the Outlying Customer-Generator's premises a second meter socket, to allow for a seamless transition at such time when the technology becomes available, or is otherwise appropriate for installation at the Outlying Customer-Generator's premises, to allow the Company to remotely control such Outlying Customer-Generator's Generating Facility.

Rule No. 24

CUSTOMER GRID SUPPLY PLUS – Continued

E. INTERCONNECTION PROCESS

1. Eligible Customer-Generator requests to interconnect and operate a Generating Facility in parallel with the Company's electric system will be processed in accordance with the procedures in the Interconnection Process Overview provided in Appendix III of Rule 14, Paragraph H.

2. Under no circumstances shall a Customer-Generator interconnect and operate a Generating Facility in parallel with the Company's electric system without prior written approval by the Company in the form of a fully executed Interconnection Agreement.

F. APPLICATION CHARGE

Each Eligible Customer submitting an application for service under this tariff shall pay a one-time application charge of $50.00 unless such application is submitted electronically via the Company's online Customer Interconnection Tool, in which case no application charge will be assessed.

G. MICROGRIDS

1. Capitalized terms used in this section are as defined in Rule No. XX, Microgrid Services Tariff.

2. During Grid-Connected Mode, the Microgrid will be operated in parallel with the Company's System.

3. A Customer may operate its Generating Facility as part of a Customer Microgrid or be a participant in a Hybrid Microgrid.

4. A Customer who intends to operate its Generating Facility within a Customer Microgrid, or as a participant in a Hybrid Microgrid, shall notify the Company in its application through the Customer Interconnection Tool.

5. A Customer who operates its Generating Facility as part of a Microgrid after obtaining interconnection approval from the Company shall update its application through the Customer Interconnection Tool. Such notification and revision shall satisfy the Customer's notice requirements set forth in Tariff Rule 3B (Change in Customer's Equipment or Operations).

6. Customer Microgrids and Hybrid Microgrid Participants shall comply with the requirements of Rule No.XX, Microgrid Services Tariff, including Section H, Microgrid Operation.

Rule No. 25

SMART EXPORT PROGRAM

A. AVAILABILITY FOR CUSTOMER-GENERATORS

The Smart Export Program is available to Eligible Customer-Generators who own or lease from a third party and operate or contract to operate with a third party a solar, wind turbine, biomass, or hydroelectric energy generating facility, or a hybrid system consisting of two or more of these facilities ("Generating Facility"), with a capacity of not more than one hundred kilowatts (100 kW) and where:

1. The Generating Facility which may include an energy storage system, is located on the Eligible Customer-Generator's premises,

2. The Generating Facility will be operated in parallel with the Company's transmission and distribution facilities,

3. The Generating Facility is in conformance with the Company's interconnection requirements provided in Rule No. 14, Paragraph H, the requirements of this tariff and the Smart Export Program Interconnection Agreement, and

4. The Generating Facility is sized and designed such that all of the Generating Facility's output is intended to offset all or part of the Eligible Customer-Generator's own electrical requirements ("Host Load").

B. SMART EXPORT INTERCONNECTION AGREEMENT

1. Eligible Customer-Generator shall complete and sign an application for service and a standard Smart Export Interconnection Agreement (100 kW or less) provided as Appendix I of this Rule ("Interconnection Agreement"), to receive service under this tariff. Where the Eligible Customer-Generator is not the person or entity in whose name electric service is rendered for the Eligible Customer-Generator's premises where the Generating Facility is located, i.e. where a landlord-tenant relationship exists, only the Eligible Customer-Generator shall be required to complete and sign the application for service and the Interconnection Agreement.

2. The Eligible Customer-Generator's Generating Facility and interconnection systems must be in compliance with all applicable safety and performance standards of the National Electric Code (NEC), the Institute of Electrical and Electronic Engineers (IEEE), accredited testing laboratories such as Underwriters Laboratories (UL), the Company's

interconnection requirements provided in Rule No. 14. Section H, and is subject to any other requirements provided in the Interconnection Agreement.

Rule No. 25

SMART EXPORT PROGRAM - Continued

C. METERING AND BILLING

1. The Company, at its expense, may install meter(s) to record the flow of electric power in each direction. The Eligible Customer-Generator shall, at its expense, provide, install and maintain all conductors, service switches, fuses, meter sockets, meter instrument transformer housing and mountings, switchboard meter test buses, meter panels and similar devices required for service connection and meter installation and operation on the customer's premises in accordance with the Company's Rule No. 14, Section A.2.

2. Eligible Customer-Generators served under this tariff who also receive energy from the Company shall be billed monthly for the energy supplied by the Company, in accordance with the Company's Rule No. 8, the applicable rate schedule, and the Company's rules filed with the Commission.

3. All rates, terms, and conditions from the applicable rate schedule will apply.

Docket No. 2018-0368, Decision and Order No. 37237 filed July 28, 2020.
Transmittal Letter dated August 27, 2020.

Rule No. 25

SMART EXPORT PROGRAM - Continued

4. The measurement of the kWh supplied by the Company to the Customer-Generator and the kWh received by the Company from the Customer-Generator shall begin on the date of installation of the required meter(s) or Company's approval to interconnect the Generating Facility, whichever comes later. For each billing period, the kWh received by the Company within the 4:00 p.m. to 12:00 a.m. and the 12:00 a.m. to 9:00 a.m. export windows shall be assigned to kWh credits applied to calculate the current bill ("Credits Applied") and/or to kWh credits carried over to the future billing period(s) within the current 12-month period (" Banked Credits"). The Company shall assign to kWh Credits Applied the amount of kWh received up to the amount of the kWh supplied by the Company. Any kWh received by the Company in excess of the kWh supplied by the Company shall be added to kWh Banked Credits. The balance of kWh Banked Credits shall be reduced by any kWh Banked Credits Applied, which are described below. Customers shall not be assigned any credits for the kWh received by the Company within the 9:00 a.m. to 4:00 p.m. non-export window.

5. The applicable Energy Credit Rates for each rate schedule shall be as follows:

Energy Credit Rates for Each Applicable Rate Schedule from 12:00 a.m. to 9:00 a.m.:

Schedule R, TOU-RI, TOU-R, TOU EV	11.00 cents per kWh daily
Schedule G, TOU-G	11.00 cents per kWh daily
Schedule J, TOU-J, U, SS, EV-F	11.00 cents per kWh daily
Schedule P, TOU-P	11.00 cents per kWh daily
Schedule F	11.00 cents per kWh daily

SHEET NO. 49.3-D
Effective February 20, 2018

Rule No. 25

SMART EXPORT PROGRAM - Continued

Energy Credit Rates for Each Applicable Rate Schedule from 9:00 a.m. to 4:00 p.m.:

Schedule R, TOU-RI, TOU-R, TOU EV	0.00 cents per kWh daily
Schedule G, TOU-G	0.00 cents per kWh daily
Schedule J, TOU-J, U, SS, EV-F	0.00 cents per kWh daily
Schedule P, TOU-P	0.00 cents per kWh daily
Schedule F	0.00 cents per kWh daily

Energy Credit Rates for Each Applicable Rate Schedule from 4:00 p.m. to 12:00 a.m.:

Schedule R, TOU-RI, TOU-R, TOU EV	11.00 cents per kWh daily
Schedule G, TOU-G	11.00 cents per kWh daily
Schedule J, TOU-J, U, SS, EV-F	11.00 cents per kWh daily
Schedule P, TOU-P	11.00 cents per kWh daily
Schedule F	11.00 cents per kWh daily

Energy Credit Rates shall be fixed at the above levels through October 20, 2022. Thereafter, the applicable Energy Credit Rates shall be subject to modification by the Commission.

Rule No. 25

SMART EXPORT PROGRAM - Continued

6. The Energy Credits for the billing period shall be calculated as the applicable Energy Credit Rate multiplied by the sum of kWh Credits Applied plus kWh Banked Credits Applied. Such Energy Credits shall appear as a separate line item on the customer bill. When the kWh supplied by the Company exceeds the kWh received by the Company, kWh Banked Credits Applied is the amount of the kWh Banked Credits that is included in the calculation of Energy Credits to reduce the Customer-Generator's electric bill calculated under the applicable rate schedule for the energy delivered by the Company to the Customer-Generator in the billing period. Application of Energy Credits may only reduce the electric bill to an amount equal to the minimum charge for the applicable rate schedule, plus any surcharges that are applicable in addition to the minimum charge.

7. A reconciliation will be made every 12 months for the customer's energy supplied by the Company with the energy received by the Company from the Eligible Customer-Generator's generating facility. This reconciliation will be performed as follows:

The kilowatthours supplied by the Company and the kilowatthours produced by the Eligible Customer-Generator shall be recorded for 12 billing periods. Coincident with the twelfth bill following the start of the smart export contract and each 12-month period thereafter, the Eligible kWh shall be determined as the lesser of the kWh supplied to the Eligible Customer-Generator or the kWh received from the Eligible Customer-Generator over the 12-month period. Credited kWh shall be defined as the sum of kWh Credits Applicd plus kWh Banked Credits Applied over the 12-month period. A Reconciliation Bill Credit shall be applied if the Eligible kWh is greater than the Credited kWh, and shall be calculated as the Energy Credit Rate multiplied by the difference between the Eligible kWh and the Credited kWh. If the Credited kWh is greater than or equal to the Eligible kWh, then there is no Reconciliation Bill Credit. At the time of the reconciliation, the balance of the kWh Banked Credits is set to zero for the next 12 month period.

If an Eligible Customer-Generator terminates its Smart Export service under this tariff prior to the end of any 12-month period, the Company shall reconcile the customer's energy supplied by the Company with the energy produced by the Eligible Customer-Generator generating facility in the same manner as the reconciliation that would have been performed at the end of the normal 12-month period.

The kilowatthours supplied by the Company and the kilowatthours received from the Eligible Customer-Generator, including an accounting of the kWh Credits Applied, kWh Banked Credits, and kWh Banked Credits Applied in each billing period of the current 12-month period will be included in the customer's regular billing statement.

D. INTERCONNECTION PROCESS

1. Eligible Customer-Generator requests to interconnect and operate a Generating Facility in parallel with the Company's electric system will be processed in accordance with the procedures in the Interconnection Process Overview provided in Appendix III of Rule 14, Paragraph H.

2. Under no circumstances shall a Customer-Generator interconnect and operate a Generating Facility in parallel with the Company's electric system without prior written approval by the Company in the form of a fully executed Interconnection Agreement.

Superseding SHEET NO. 49-3-G
Effective ~~February 20~~June 29, 2018 _____ ~~2018~~Month Day, Year

REVISED SHEET NO. 49.3-G
Effective ~~June 29,~~

Rule No. 25

SMART EXPORT PROGRAM - Continued

E. APPLICATION CHARGE

Each Eligible Customer submitting an application for service under this tariff shall pay a one-time application charge of $50.00 unless such application is submitted electronically via the Company's online Customer Interconnection Tool, in which case no application charge will be assessed.

F. MICROGRIDS

1. Capitalized terms used in this section are as defined in Rule No. XX, Microgrid Services Tariff.

2. During Grid-Connected Mode, the Microgrid will be operated in parallel with the Company's System.

3. A Customer may operate its Generating Facility as part of a Customer Microgrid or be a participant in a Hybrid Microgrid.

4. A Customer who intends to operate its Generating Facility within a Customer Microgrid, or as a participant in a Hybrid Microgrid, shall notify the Company in its application through the Customer Interconnection Tool.

5. A Customer who operates its Generating Facility as part of a Microgrid after obtaining interconnection approval from the Company shall update its application through the Customer Interconnection Tool. Such notification and revision shall satisfy the Customer's notice requirements set forth in Tariff Rule 3B (Change in Customer's Equipment or Operations).

6. Customer Microgrids and Hybrid Microgrid Participants shall comply with the requirements of Rule No.XX, Microgrid Services Tariff, including Section H, Microgrid Operation.

Rule No. 26
COMMUNITY-BASED RENEWABLE ENERGY PROGRAM
PHASE 1

A. AVAILABILITY

Phase 1 ("Phase 1") of the Company's Community-Based Renewable Energy ("CBRE") program ("Program") is available to residential and commercial customers of the Company ("Customers") where:

1. Customer has a current electricity account with the Company and has received service at the same location for which they are requesting participation for at least 6 months at the time of enrollment and has not received any disconnection notifications at that same location within the last 12 months;

2. Customer is not currently enrolled or participating in Schedule Q, Net Energy Metering, Feed-in Tariff, Standard Interconnection Agreement, Customer Grid Supply, Customer Grid Supply Plus, Smart Export, or Customer Self Supply ("CSS") tariff program, or similar customer program; and

3. Customer is not currently participating in another CBRE Phase 1 Facility.

B. CUSTOMER PARTICIPATION

Customers who subscribe to a CBRE Phase 1 Facility ("Facility") are defined as "Subscribers."

1. Customers shall be allowed to purchase or lease an interest in the energy output of any eligible CBRE Phase 1 Facility on the same island as their service address that is allocated CBRE Phase 1 Program capacity to offset their energy consumption.

2. Subscribers shall be required to enter into an appropriate CBRE Subscriber Agreement ("Agreement") with a CBRE subscriber organization ("Subscriber Organization"). The Agreement shall contain standard information and provisions that ensure transparency and proper consumer protection. The Agreement shall include or be supplemented by, at minimum, the following elements:

Order No. 35560; Filed June 29, 2018,
Transmittal Letter dated July 10, 2018.

Rule No. 26 - Continued
COMMUNITY-BASED RENEWABLE ENERGY PROGRAM
PHASE 1

a. CBRE Phase 1 Facility and Subscriber Organization information

   i. CBRE Phase 1 Facility name and address;
   ii. CBRE Subscriber Organization and/or Owner name, address, website URL, phone number, and email address;
   iii. Subscriber name, address, phone number, and email address; and
   iv. Subscriber's Utility name and account number;

b. Financial Information:

   i. Credit rate ("Credit Rate") and calculation;
   ii. Bill credit mechanism and timing;
   iii. Tax and securities implications;
   iv. Use of escrow account to hold any pre-development enrollment fees or deposits, which shall be released to Subscriber Organization upon commercial operation of the Facility; and
   v. Transfer and/or exit fees and terms;

c. The Subscriber Agency Agreement and Consent Form attached hereto as Appendix I, which each Subscriber Organization shall complete with each Subscriber acquiring an interest in such Subscriber Organization's CBRE Facility, permitting the sharing of: .

   i. Subscriber's Account and Energy Usage Data;
   ii. Subscription Information;
   iii. Aggregated CBRE Project data and anonymized Subscriber data; and
   iv. Subscriber data in response to information requests from the PUC or the Division of Consumer Advocacy ("CA").

d. The standard form Disclosure Checklist is attached hereto as Appendix II, which each Subscriber Organization shall complete with each Subscriber acquiring an interest in such Subscriber Organization's CBRE Facility.

Order No. 35560; Filed June 29, 2018,
Transmittal Letter dated July 10, 2018.

Rule No. 26 - Continued
COMMUNITY-BASED RENEWABLE ENERGY PROGRAM
PHASE 1

3. Subscribers shall obtain approval of eligibility, confirm maximum buy-in level and apply to enroll into the CBRE Program through the Company (the Company, in its role as administrator of the CBRE Program, is sometimes referred to herein as the "Administrator"). Company shall facilitate completion of these tasks, but final approval and enrollment of the Subscriber into a Subscriber's Organization's CBRE Phase 1 Facility shall rest with such Subscriber Organization.

4. Subscriber's effective kilowatt ("kW") alternating current ("AC") interest in the CBRE Phase 1 Facility shall be calculated based on the Subscriber's portion of the renewable energy output of the CBRE Phase 1 Facility multiplied by the total capacity of the CBRE Phase 1 Facility in kW AC.

5. Subscribers shall be required to purchase a minimum of 1 kW AC, except in the case of confirmed low to moderate income ("LMI") Subscribers for which this requirement shall be 0.5 kW AC.

6. Subscribers shall be permitted to purchase a CBRE Program interest equivalent to an expected production of no more than 100 percent of their historic energy consumption for the previous 12 months.

    a. Company shall use the 12 months immediately prior to the first billing cycle upon which a Subscriber is eligible to receive a credit for the CBRE Subscription to determine the Subscriber's previous 12 months of energy consumption.
    b. If Subscriber does not have a 12 month billing history as of that first billing cycle, and there is not 12 months of billing history, including billing history of another customer associated with the Subscriber's premises, the Company shall use the available monthly average consumption multiplied over 12 months in order to generate a proxy average annual consumption.

Rule No. 26 - Continued
COMMUNITY-BASED RENEWABLE ENERGY PROGRAM
PHASE 1

7. In Phase 1, 40 percent of the total output of each project's total CBRE capacity shall be reserved for individual subscriptions up to 50 kW.

8. An eligible Customer shall be allowed to acquire and hold an interest in only one (1) CBRE Phase 1 Facility at any given time.

9. Subscriber shall maintain, for the duration of their participation in the CBRE Program, an electricity account and service address on the same island as the CBRE Phase 1 Facility in which they are participating.

10. Subscriber may change the premises to which the CBRE Phase 1 Facility electricity generation shall be attributed, as long it is on the same island and meets the eligibility requirements set forth herein. No transfer fee shall be applied.

11. If Subscriber requests to transfer their interest to another Customer, the Subscriber Organization shall confirm that Customer's eligibility as set forth herein. Any payment for the transfer shall be in accordance with the preset repurchase/resale price schedule outlined in the Agreement.

    a. There shall be no transfer charge/fee if the meter associated with the account remains unchanged.
    b. A transfer shall be at least 50% of the selling Subscriber's interest.
    c. Any transfer will not be effective until the Subscriber Organization notifies the Administrator of the transfer. For any notice of transfer on or prior to the twentieth (20th) day of any month, such transfer will be effective as of the first (1st) day of that month. For any notice of transfer after the twentieth (20th) day of a month, the transfer will be effective as of the first (1st) day of the next month.

Order No. 35560; Filed June 29, 2018,
Transmittal Letter dated July 10, 2018.

Rule No. 26 - Continued
COMMUNITY-BASED RENEWABLE ENERGY PROGRAM
PHASE 1

12. If Subscriber requests to sell all or any portion of their Subscription back to the Subscriber Organization, Subscriber Organization shall buy back the interest in accordance with the preset repurchase/resale price schedule outlined in the Agreement.

    a. Subscriber Organization shall complete the buy-back of the Subscriber's interest within thirty (30) days of the Subscriber's request.
    b. Upon completion of a subscription buy-back, the Subscriber Organization shall notify the Company within two business days of completion of the transaction. The Company shall confirm such buy-back in the Subscriber database and cease CBRE participation credits effective as communicated by the Subscriber Organization on the first day of the month of notification if such notice is given on or prior to the twentieth (20th) day of the month. Notice provided after the twentieth (20th) day of the month will be effective as of the first (1st) day of the next month.

13. Nothing in the Agreement shall be deemed to alter or modify any rate schedule, charge, or condition of service established from time to time by the Commission for electric service provided by the Company. All such rates and charges from the Customer's applicable rate schedule shall apply and remain, subject to change in accordance with Commission rules.

Order No. 35560; Filed June 29, 2018,
Transmittal Letter dated July 10, 2018.

Rule No. 26 - Continued
COMMUNITY-BASED RENEWABLE ENERGY PROGRAM
PHASE 1

C. CREDIT RATE

1. Subscribers served under this tariff who also receive energy from the Company shall be billed monthly for the energy supplied by the Company, in accordance with the Company's Rule No. 8, the applicable rate schedule, and Company's rules filed with the Commission.

2. All rates, terms, and conditions from the applicable rate schedule will apply.

3. The applicable credit rates ("Credit Rates") for CBRE Phase 1 subscriptions purchased or leased by Subscribers for each rate schedule shall be as follows:

   Energy Credit Rates for Each Applicable Rate Schedule:

Schedule R, TOU-RI, TOU-R, TOU-EV	15.00 cents per kWh daily
Schedule G, TOU-G	15.00 cents per kWh daily
Schedule J, TOU-J, U, SS, EV-F	15.00 cents per kWh daily
Schedule P, TOU-P	15.00 cents per kWh daily
Schedule F	15.00 cents per kWh daily

   Credit Rates shall be fixed at the above levels for the term of the Agreement, which for Phase 1 shall be the CBRE Phase 1 Facility life. Thereafter, the applicable energy credit rates shall be subject to modification by the Commission.

Order No. 35560; Filed June 29, 2018,
Transmittal Letter dated July 10, 2018.

Rule No. 26 - Continued
COMMUNITY-BASED RENEWABLE ENERGY PROGRAM
PHASE 1

4. The monthly CBRE participation credit for each Subscriber shall begin to accrue on the first day of the month in which Subscriber completes the purchase or lease of Subscriber's subscription into a CBRE Phase 1 Facility, provided that Subscriber Organization promptly notifies the Administrator of Subscriber's subscription no later than the twentieth (20th) day of the month in which Subscriber subscribed into the CBRE Phase 1 Facility. Subscriber's monthly CBRE participation credit shall begin accruing on the first (1st) day of the next month if the notice by the Subscriber Organization is made after the twentieth (20th) day of the month. The amount of the Subscriber's monthly CBRE participation credit shall be equal to the Subscriber's interest in the energy output of the Facility, multiplied by the Facility's actual energy output, multiplied by the applicable Credit Rate per kilowatt-hour ("kWh").

5. A Subscriber's monthly CBRE participation credit shall be applied to offset eligible charges on the Subscriber's electric bill no earlier than the 15th day of the following month but no later than two billing cycles. Subscribers will see eligible credits on a future bill depending on the day their meter is read. Eligible charges on the Subscriber's electric bill shall be all light and power charges.

6. The Subscriber's electric bill cannot be reduced below the sum of the customer charge, the Green Infrastructure Fee, and any other per-customer charge for the customer's applicable rate schedule or the minimum bill applicable in the underlying tariff, whichever is greater.

Order No. 35560; Filed June 29, 2018,
Transmittal Letter dated July 10, 2018.

Rule No. 26 - Continued
COMMUNITY-BASED RENEWABLE ENERGY PROGRAM
PHASE 1

7. If the Subscriber's monthly CBRE participation credit exceeds the eligible charges, the value of excess credits shall be carried over to the next billing period(s) within the current 12-month period, as a CBRE participation credit and applied to the Subscriber's electric bill(s) subject to paragraph 5 and 6 above. Reconciliation will be made at the end of every 12-month period by applying the Subscriber's remaining CBRE participation credit to the Subscriber's remaining eligible charges within the 12-month period. Any CBRE participation credit that remains unused at the end of each 12-month period shall be extinguished.

8. If the Subscriber terminates its CBRE service prior to the end of any 12-month period, the Company shall reconcile the remaining CBRE participation credit to remaining eligible charges at the end of the monthly billing period when service was terminated, similar to the reconciliation that would have been performed at the end of the normal 12-month period. Any CBRE participation credit that remains unused shall be extinguished.

Rule No. 26 - Continued
COMMUNITY-BASED RENEWABLE ENERGY PROGRAM
PHASE 1

D. SUBSCRIBER ORGANIZATION PARTICIPATION

1. A CBRE Phase 1 Facility may be developed by an approved Subscriber Organization. An applicant seeking to become an approved Subscriber Organization shall be referred to as an "Applicant" until approved.

2. Prior to developing a Facility, an Applicant shall submit a completed Application to the Company, which shall provide the following in order to be considered a complete Application:

   a. A one-time Application processing fee of $1,000 per application, 75% of which shall be refunded if the Applicant submits a CBRE Phase 1 Facility less than or equal to 250 kW AC and is not selected to receive CBRE Program Phase 1 capacity;

   b. Applicant company name, contact information, and address, and indicate their role (e.g., Subscriber Organization, owner, or operator);

   c. Applicant contact person name, contact information, and address;

   d. Entity name, contact information, address, and identity role of the Subscriber Organization if approved; if entities other than the Subscriber Organization will act as either owner or operator of the CBRE Facility, name, role identification, contact information, and address shall be provided for those other entities;

   e. Proposed CBRE Phase 1 Facility name, address, and estimated completion date;

   f. CBRE Phase 1 Facility system nameplate direct current (DC) capacity, AC output (inverter nameplate), mount location, tracker type, azimuth, and tilt.

Order No. 35560; Filed June 29, 2018,
Transmittal Letter dated July 10, 2018.

Rule No. 26 - Continued
COMMUNITY-BASED RENEWABLE ENERGY PROGRAM
PHASE 1

g. If the Applicant is a foreign entity, confirmation from the State of Hawai‘i Department of Commerce and Consumer Affairs that the Applicant is currently authorized to do business in the State of Hawai‘i as of the date of submittal.

h. A Certificate of Good Standing for the Applicant obtained from the State of Hawai‘i Department of Commerce and Consumer Affairs dated no earlier than thirty (30) days prior to submittal by the Applicant.

i. Demonstration of capability to deliver. Applicant, its affiliated companies, partners, and/or contractors and consultants on the Applicant's team, shall provide written documentation that demonstrates experience in the development and operation of at least one renewable energy generation facility similar in size, scope, and structure to the Facility being proposed. The independent observer ("IO") may waive this provision for Applicants proposing systems under 250 kW AC, that meet specific criteria, such as 501(c)(3) organizations, Customers choosing to collectively develop systems for their own benefit as Subscribers, organizations focused on delivering services to LMI ratepayers, or others, as determined appropriate by the IO.

Applications shall be accepted beginning on the effective date of the tariff. Applications deemed complete (providing all information required under Section D.2 above) shall receive a timestamp which shall serve as the date of the Applicant's application for award and queue purposes.

3. Phase 1 CBRE Program capacity shall be awarded on a first-come, first-served basis based on the timestamp of a completed Application. If an Applicant submits an Application that does not contain all the required items listed in Section D.2 above, the Application shall be deemed incomplete and the timestamp for the completed Application shall be when the last item(s) is/are received from the Applicant that renders the Application complete under Section D.2, with the exception of Section D.2.a, regarding Application processing fee payment and Section D.2.i, regarding the "waiver" from the IO. If the application fee or the waiver is the only item missing and it is received within fifteen (15) days from the date of submission, the time stamp will be the date the Application was submitted electronically. Partially completed Applications will be deemed abandoned if all required items are not submitted so as to render the Application complete after sixty (60) days.

Rule No. 26 - Continued
COMMUNITY-BASED RENEWABLE ENERGY PROGRAM
PHASE 1

Phase 1 Applications for CBRE Phase 1 Facilities shall be conditionally accepted subject to verification of the requirements in Section D.2 above. Upon successfully meeting the CBRE requirements, the Facility shall be accepted into Phase 1 of the CBRE Program if unused capacity is available to accept the Applicant's project. If the Applicant's proposed project size exceeds the available capacity remaining for Phase 1, the Applicant shall have the one-time option to reduce the proposed size of its Facility to the remaining capacity available. If the Applicant does not exercise this option, the Applicant's application shall be placed in the Phase 1 queue described below. Facility selection shall continue until the capacity allocation for Phase 1 on each island is fully allocated. If a Facility drops out after selection for inclusion in Phase 1 the allocation for such Facility shall be added back to the capacity allocation for the respective island and the first complete Application for a CBRE Phase 1 Facility in the queue for that island (with the one-time option described above) shall be offered the opportunity to become a CBRE Phase 1 Subscriber Organization. The Company shall continue to offer Subscriber Organization status to Applicants in the applicable queue until the capacity allocation made available is filled. Concurrently and after acceptance into Phase 1, CBRE Phase 1 Facilities shall undergo completeness and technical review under Company's Rule 14H for interconnection.

4. After any applicable capacity limitations are met in Phase 1, excess completed Applications for CBRE Phase 1 Facilities in that category shall be placed in a queue to replace any Phase 1 capacity dropouts. Phase 1 will terminate one (1) year after the commencement of Phase 2 of the CBRE Program ("Phase 2"). If, at the conclusion of Phase 1, there remains excess capacity and no Applicants in the queue desiring to use such capacity, the remaining unused capacity shall be extinguished or added to the available capacity in Phase 2, as directed by the Commission. The queue for Phase 1 shall be terminated as well and any subsequent failure of a CBRE Phase 1 Facility shall not be replaced.

Order No. 35560; Filed June 29, 2018,
Transmittal Letter dated July 10, 2018.

Rule No. 26 - Continued
COMMUNITY-BASED RENEWABLE ENERGY PROGRAM
PHASE 1

5. Applications for queued CBRE Phase 1 Facilities may be resubmitted at no additional cost in Phase 2.

6. Additional fees and deposit required from Subscriber Organizations in addition to the Application processing fee shall include:

   a. Any applicable interconnection fees, costs and expenses necessary to interconnect the CBRE Phase 1 Facility to the system grid; and
   b. A $5/kW AC Program Administration Fee, assessed annually commencing on the first day of the month immediately succeeding the date of initial commercial operations for any CBRE Phase 1 Facility.

7. "Unsubscribed energy" is CBRE Phase 1 Facility output that is not associated with any Subscriber subscription and therefore not allocated to a Subscriber. The following shall be effective six months from the date of initial commercial operations. Compensation for unsubscribed energy shall be as follows:

   a. For any Facility with more than 15 percent unsubscribed energy, the compensation for the Unsubscribed energy for that month shall be discounted by the percentage of energy that is unsubscribed.
   b. Unsubscribed capacity shall be calculated at the end of the month and applied retroactively to the CBRE Phase 1 Facility when calculating that month's prior unsubscribed credits.

Order No. 35560; Filed June 29, 2018,
Transmittal Letter dated July 10, 2018.

Rule No. 26 - Continued
COMMUNITY-BASED RENEWABLE ENERGY PROGRAM
PHASE 1

8. A Subscriber Organization shall be required to have a minimum of four individual Subscribers per CBRE Phase 1 Facility at all times. For a period of six (6) months following commercial operations, the Subscriber Organization shall incur no penalty if it should fall below this minimum number of Subscribers. Effective after six (6) months of commercial operations, the following shall be placed into effect for the remainder of the term of the Subscriber Organization's Facility:

    a. For any Facility which does not have the minimum four (4) individual Subscribers for six (6) consecutive months, , the Subscriber Organization's compensation for energy delivered in the next month shall be reduced by 50%.
    b. If the Subscriber Organization's unsubscribed energy is also greater than 15% in such month, the compensation for energy delivered in that month shall be reduced by a percentage equal to the higher of (1) 50% or (2) the percentage of unsubscribed energy for that month.

9. Subscriber Organizations notification of a Subscriber's purchase or lease of a subscription shall be Subscriber Organization's representation and warranty that the Subscriber Organization has executed a Subscriber Agreement with the Subscriber and provided a completed Disclosure Checklist executed by the Subscriber that is attached to the Subscriber Agreement for such Subscriber. The Administrator, IO or the Commission may request copies of all Subscriber Agreements and/or Disclosure Checklists completed by the Subscriber Organization with its Subscribers at any time during the term of the Subscriber Organization's Facility.

10. The Company may, but shall not be required to, confirm that the Subscribers submitted by the Subscriber Organization are qualified pursuant to Section A above for participation in the CBRE Phase 1 Program. If any Subscribers are not qualified or are not purchasing an interest within the allowed limits set out in Section B above, then the Subscribers shall not be accepted into Phase 1 of the CBRE Program and the Company shall notify the Subscriber Organization of all disqualified Subscribers and remove them from the roster of that Subscriber Organization's list of Subscribers.

Order No. 35560; Filed June 29, 2018,
Transmittal Letter dated July 10, 2018.

Rule No. 26 - Continued
COMMUNITY-BASED RENEWABLE ENERGY PROGRAM
PHASE 1

E. CAPACITY ALLOCATION

1. Phase 1 capacity allocation is for "Standard" CBRE Facilities, which are defined as all CBRE Facilities that are developed, owned, or operated by a third party.

2. Only solar photovoltaic facilities shall be allowed in Phase 1.

3. The capacity allocation in Phase 1 shall be 1.0 MW.

Order No. 35560; Filed June 29, 2018,
Transmittal Letter dated July 10, 2018.

Rule No. 26 - Continued
COMMUNITY-BASED RENEWABLE ENERGY PROGRAM
PHASE 1

F. COMMUNICATIONS AND CONTROLLABILITY

1. The Facility shall include a telemetry and control interface which allows the Company to remotely measure, monitor, evaluate and verify technical compliance, CBRE Facility performance, and power quality and, if necessary, control the CBRE Facility ("Communication and Controls"). The acceptable method(s) of implementing the Communication and Control requirements will be specified by the Company. Monitoring will be performed by system dispatchers or operators at the Company's control center.

2. For CBRE Facilities with an aggregate capacity greater than or equal to 250 kW, computerized supervisory control shall be required, and include monitoring of: (a) gross generation by the CBRE Facility; (b) feedback of Watts, Vars, WattHours, current and voltage; (c) Vars furnished by the utility; (d) status of the interrupting device; and (e) if available, monitoring of: frequency (Hertz). In addition, the supervisory control will allow the utility to trip the interrupting device pursuant to the terms of an interconnection agreement ("Interconnection Agreement") between the Subscriber Organization and the Company, attached hereto as Appendix III.

3. For CBRE Facilities with an aggregate capacity less than 250 kW shall comply with the Communication and Control requirements stated in Section F.2 above, or in the alternative, upon Company approval, may implement Communication and Control through cellular or comparable technology, and include monitoring of: (a) gross generation by the CBRE Facility; (b) feedback of Watts, Vars, WattHours, current and voltage; and (c) if available, monitoring of: connection status of the CBRE Facility, frequency (Hertz). In addition, the cellular or comparable technology control will allow the utility to trip the CBRE Facility pursuant to the terms of the Interconnection Agreement.

Order No. 35560; Filed June 29, 2018,
Transmittal Letter dated July 10, 2018.

Rule No. 26 - Continued
COMMUNITY-BASED RENEWABLE ENERGY PROGRAM
PHASE 1

G. INTERCONNECTION

1. All CBRE Phase 1 Facilities shall be designed to interconnect and operate in parallel with the Company's system without adversely affecting the operations of its customers and without presenting safety hazards to the Company's or other customers' personnel. Such Facilities and the interconnection systems shall be in compliance with all applicable safety and performance standards of the National Electric Code (NEC), the Institute of Electrical and Electronics Engineers (IEEE), the Company's interconnection standards and procedures provided in Rule No. 14H, and Rule No. 19, as amended from time to time, and also subject to any other requirements as may be specified in the Interconnection Agreement or the standard form contract ("Standard Form Contract" or "SFC"), attached here to as Appendix IV).

2. CBRE Phase 1 Facilities shall have priority for available hosting capacity on a particular circuit over projects planned for that particular circuit that have not commenced its technical review process.

3. CBRE Phase 1 Facilities interconnected at the Distribution Level[1] that are selected shall follow the applicable Rule No. 14H interconnection process at the time of interconnection.

4. CBRE Phase 1 Facilities interconnecting at the Sub-Transmission and Transmission levels shall follow the interconnection process applicable to their Facilities at the time of interconnection.

5. Each CBRE Phase 1 Facility shall have one interconnection point and suitable metering equipment to measure the energy output and data required for calculation of Compensable Curtailment (as defined in the SFC) of the CBRE Phase 1 Facility.

[1] Distribution system (Level) is defined as interconnection to electrical wires, equipment, and other facilities at the distribution voltage levels (such as 25kV (Hawaiian Electric only), 12kV, or 4kV) owned or provided by the Company, through which the utility provides electrical service to its customers.

Order No. 35560; Filed June 29, 2018,
Transmittal Letter dated July 10, 2018.

Rule No. 26 - Continued
COMMUNITY-BASED RENEWABLE ENERGY PROGRAM
PHASE 1

H. MICROGRIDS

1. Capitalized terms used in this section are as defined in Rule No. XX, Microgrid Services Tariff.

2. During Grid-Connected Mode, the Microgrid will be operated in parallel with the Company's System.

3. A Customer may operate its Generating Facility as part of a Customer Microgrid or be a participant in a Hybrid Microgrid.

4. A Customer who intends to operate its Generating Facility within a Customer Microgrid, or as a participant in a Hybrid Microgrid, shall notify the Company in its application through the Customer Interconnection Tool.

5. A Customer who operates its Generating Facility as part of a Microgrid after obtaining interconnection approval from the Company shall update its application through the Customer Interconnection Tool. Such notification and revision shall satisfy the Customer's notice requirements set forth in Tariff Rule 3B (Change in Customer's Equipment or Operations).

6. Customer Microgrids and Hybrid Microgrid Participants shall comply with the requirements of Rule No.XX, Microgrid Services Tariff, including Section H, Microgrid Operation.

Order No. 35560; Filed June 29, 2018,
Transmittal Letter dated July 10, 2018.

Rule No. 26 - Continued
COMMUNITY-BASED RENEWABLE ENERGY PROGRAM
PHASE 1

~~H.~~I. CBRE PROGRAM FACILITY SUBSCRIBER ORGANIZATION AGREEMENTS

1. Successful Subscriber Organizations (completed application process and is offered CBRE Program capacity) shall execute the SFC and Interconnection Agreement with the Company.

2. The SFC and Interconnection Agreement shall remain in effect for the Term set forth therein.

3. Subscriber Organizations shall pay fees as described in Sections D.2 and D.6 above.

4. Subscriber Organizations shall ensure CBRE Facilities are built within the specific number of months as specified in the SFC.

5. Subscriber Organizations are responsible for their own operation and maintenance of their facility to ensure the facility meets agreed performance warranties, per terms and conditions set forth in the Interconnection Agreement and Tariff Rule 14H.

6. Electric energy delivered to the Subscriber Organization by the Company shall be billed under the Company's applicable rate schedule. Electric energy delivered to the Subscriber Organization by the Company shall be metered separately from the electric energy delivered by the Subscriber Organization to the Company, either by use of multiple meters or a meter capable of separately recording the inflow and outflow of electricity. Electric energy generated by the CBRE Phase 1 Facility shall not be used to offset electric energy needs of the Facility itself so as to maximize the output of the Facility and the corresponding bill credits of the Subscribers to such Facility. Subscriber Organization will calculate and will be responsible for the accuracy of the Subscriber's monthly credit. The Subscriber's monthly credit will be provided by the Subscriber Organization to the Company in dollars, per Section C.4, no later than seven days after the end of each calendar month.

Order No. 35560; Filed June 29, 2018,
Transmittal Letter dated July 10, 2018.

Rule No. 26 - Continued
COMMUNITY-BASED RENEWABLE ENERGY PROGRAM
PHASE 1

~~I.~~J. ALLOWED CBRE FACILITY DEVELOPMENT TIMEFRAME

1. Pre-Execution Requirements: Prior to execution of the SFC and Interconnection Agreement, CBRE Facilities must comply with the requirements of this CBRE Tariff and prove that the CBRE Facility is "shovel-ready'" and actively progressing towards completion. Company shall issue a written notice to the Subscriber Organization that will list all documentation that is required from the Subscriber Organization and/or any action that must be taken by the Subscriber Organization in order to comply with the CBRE Tariff. Unless otherwise expressly specified in an existing tariff, the Subscriber Organization shall have fifteen (15) business days from the date of such notice to submit the required documentation and/or provide evidence that the required action has been completed.

2. Commercial Operations Date: CBRE Phase 1 Facilities must be placed into operation within the timeframe specified in the SFC and measured from the Execution Date of the SFC. After completion of required testing by the Company, a Subscriber Organization will be permitted to commence commercial operations as of the first (1st) day of the month immediately following the Company's acceptance of the CBRE Phase 1 Facility.

Order No. 35560; Filed June 29, 2018,
Transmittal Letter dated July 10, 2018.

Rule No. 26 - Continued
COMMUNITY-BASED RENEWABLE ENERGY PROGRAM
PHASE 1

3. Removal of CBRE Facility from CBRE Program and Termination:

   a. Failure To Meet Pre-Execution Requirements or Post-Execution Requirements: Should a Subscriber Organization fail to comply with pre-execution (before execution of the Interconnection Agreement or SFC) requirements, the Subscriber Organization's Facility shall be subject to removal from the CBRE Program. Should a Subscriber Organization fail to meet post-execution requirements specified in the SFC or the Interconnection Agreement, the SFC and the Interconnection Agreement shall be subject to termination in accordance with the terms of the SFC, the Interconnection Agreement (as applicable) and this tariff rule. Company, with concurrence of the IO, shall notify the Subscriber Organization when a requirement has been missed or defaulted upon (after any applicable cure period) in accordance with the notice provisions under the SFC or the Interconnection Agreement. The Subscriber Organization shall have five (5) business days to provide proof that the Company and IO's determination was in error. If no response is received or if the proof is deemed insufficient by the Company and IO, the Subscriber Organization's Facility in question may be removed from the CBRE Program or the SFC and Interconnection Agreement may be terminated, as may be applicable, with notice to the Subscriber Organization, which termination shall be effective no earlier than thirty (30) days after such notice. Company shall provide a copy of such notice of termination to all Subscribers of such facility, the IO and the PUC. Concurrence of both the Company and the IO shall be required before a CBRE Facility can be removed from the CBRE Program or an SFC and Interconnection Agreement can be terminated. Upon removal of a CBRE Facility from the CBRE Program or termination of an SFC and Interconnection Agreement, any fees and security deposits paid to the Company by the Subscriber Organization for such Facility shall be forfeited.
   b. Failure To Meet Commercial Operation Date: Should a Subscriber Organization fail to place a CBRE Phase 1 Facility into operation within the timeframe specified in the SFC, the SFC (and Interconnection Agreement) may be terminated and any fees and security deposits paid to the Company by the Subscriber Organization will be forfeited all as specified in the SFC. If terminated by the Company, Subscriber Organization shall not retain its capacity and/or queue space in the CBRE Program once terminated. If the Subscriber Organization subsequently wishes to complete its CBRE Phase 1 Facility, the Subscriber Organization will be required to re-apply to be a Subscriber Organization under these tariff rules, subject to all requirements herein, including capacity limitations and payment of fees.

Order No. 35560; Filed June 29, 2018,
Transmittal Letter dated July 10, 2018.

Rule No. 26 - Continued
COMMUNITY-BASED RENEWABLE ENERGY PROGRAM
PHASE 1

4. Extensions For Good Cause: When extraordinary circumstances exist that may cause a Subscriber Organization to miss a pre-execution requirement, post-execution milestone or delay the completion of a CBRE Facility within the allowed Facility development timeframe, the Subscriber Organization may request an extension, not to exceed 90 days, of the applicable deadline. All requests for extensions must be made at the time of the event that necessitated the need for an extension. The Company and the IO may each unilaterally approve a request for an extension. A request for an extension may only be rejected by the joint approval of the Company and IO. To the extent that any delays are caused by the Company, a day-for-day extension of time for the period of the delay shall be granted to the affected CBRE Facility to comply with the applicable deadline.

5. Commission Oversight. The Commission shall have ultimate oversight over the CBRE Phase 1 Program. Material disputes unresolved after consultation with the IO may be presented to the Commission for review and the Commission may issue guidance and/or orders to resolve such disputes consistent with these tariff rules.

RULE NO. 27

Net Energy Metering Plus

A. ELIGIBLE CUSTOMER-GENERATOR

The Net Energy Metering Plus ("NEM+") Program is available to existing Eligible Customer- Generators under the Company's Net Energy Metering program (as described in Rule No. 18), that wish to add a non-exporting renewable energy system ("Non-Export Facility" or "Generating Facility") with or without an energy storage system or a standalone energy storage system, and where the following requirements are met:

1. The Non-Export Facility is located on the same premises as the Eligible Customer- Generator's existing Net Energy Metering generating facility ("NEM Facility").

2. The Non-Export Facility is sized and designed such that all of the Non-Export Facility's output is intended to serve on-site load at the Eligible Customer-Generator's premises.

3. The existing NEM Facility shall not be materially changed (e.g., increase in photovoltaic module wattage, additional photovoltaic modules, modified operation of the facility) without the prior written consent of the Company.

4. The existing NEM Facility will not export more than the original approved capacity of such NEM Facility.

5. The Non-Export Facility shall not export electric energy to the Company's electric system, except when permitted to provide Grid Support as set forth in Appendix II attached hereto.

6. The capacity of a Non-Export Facility that is comprised of more than a stand-alone energy storage system (e.g., Customer Self-Supply System) must be less than 100 kW (Capacity is defined as the sum of all inverter string capacities. The inverter string capacity is the lesser of the nominal inverter AC capacity or the nominal DC capacity for that inverter. The DC capacity is the sum of all generation (including energy storage systems) capacities connected to that inverter.).

7. The Non-Export Facility is in conformance with the Company's interconnection requirements provided in Rule No. 14, Paragraph H.

8. The Non-Export Facility shall be designed and configured to meet the Technical Specifications set forth in Appendix II attached hereto.

B. INTERCONNECTION AGREEMENT AND REQUIREMENTS

1. Eligible Customer-Generators shall complete and sign an application for service and a Standard Interconnection Agreement For Net Energy Metering Plus provided as Appendix I of this Rule ("Interconnection Agreement"), to receive NEM+ service, which shall not be effective until approved and executed by the Company. Where the Eligible Customer-Generator is not the person or entity in whose name electric service is rendered for the Eligible Customer-Generator's premises where the Generating Facility is located, i.e. where a landlord-tenant relationship exists, only the Eligible Customer- Generator shall be required to complete and sign the application for service and the Interconnection Agreement.

2. The Eligible Customer-Generator's existing Net Energy Metering Facility, to the extent materially changed, Non-Export Facility and associated interconnection systems must be in compliance with all applicable safety and performance standards of the National Electric Code (NEC), the Institute of Electrical and Electronic Engineers (IEEE), accredited testing laboratories such as Underwriters Laboratories (UL), the Company's interconnection requirements provided in Rule No. 14. Section H, Appendix I, and is subject to any other requirements provided in the Interconnection Agreement.

C. METERING AND BILLING

1. The Company, at its expense, may install advanced meter(s) to record the flow of electric power in each direction. The Eligible Customer-Generator shall, at its expense, provide, install and maintain all conductors, service switches, fuses, meter sockets, meter instrument transformer housing and mountings, switchboard meter test buses, meter panels and similar devices required for service connection and meter installations on the customer's premises in accordance with the Company's Rule No. 14, Section A.2.

2. Eligible Customer-Generators served under this tariff who also receive energy from the Company shall be billed monthly for the energy supplied by the Company, in accordance with the Company's Rule No. 8, the applicable rate schedule, and the Company's rules filed with the Commission.

3. Eligible Customer-Generators shall be billed for the kilowatt-hours supplied by the Company, and receive monetary credits for the kilowatt-hours produced by the Eligible Customer-Generator through its existing NEM Facility (together with any inadvertent export of the Non-Export Facility), in a manner consistent with the billing provisions of the Company's Rule No. 18, Section C.

4. All rates, terms, and conditions from the applicable rate schedule will apply.

5. Company's agreement to accept inadvertently exported electric power from the Generating Facility under this tariff is solely an accommodation. Neither this tariff nor the Interconnection Agreement provide for, require or otherwise obligate Company to measure, purchase, transmit, distribute, or store any electric power that may be delivered to Company's distribution system by Eligible Customer-Generator.

D. INTERCONNECTION PROCESS

1. Eligible Customer-Generator requests to interconnect and operate a Non-Export Facility in parallel with the Company's electric system will be processed in accordance with the procedures in the Interconnection Process Overview provided in Appendix III of Rule 14, Paragraph H. Non-Export Facilities comprised of more than a standalone energy storage system, e.g., battery storage, and that meet the Technical Specifications stated in Appendix II to this Rule shall qualify for expedited interconnection subject to the terms and conditions set forth in Company Rule 14, Section H, Appendix III. Non-Export Facilities comprised solely of an energy storage system shall not require an interconnection review by the Company.

2. Under no circumstances shall a Customer-Generator interconnect and operate a Non-Export Facility in parallel with the Company's electric system without prior written approval by the Company in the form of a fully executed Interconnection Agreement provided in Appendix I.

E. MICROGRIDS

1. Capitalized terms used in this section are as defined in Rule No. XX, Microgrid Services Tariff.

2. During Grid-Connected Mode, the Microgrid will be operated in parallel with the Company's System.

3. A Customer may operate its Generating Facility as part of a Customer Microgrid or be a participant in a Hybrid Microgrid.

4. A Customer who intends to operate its Generating Facility within a Customer Microgrid, or as a participant in a Hybrid Microgrid, shall notify the Company in its application through the Customer Interconnection Tool.

5. A Customer who operates its Generating Facility as part of a Microgrid after obtaining interconnection approval from the Company shall update its application through the Customer Interconnection Tool. Such notification and revision shall satisfy the Customer's notice requirements set forth in Tariff Rule 3B (Change in Customer's Equipment or Operations).

6. Customer Microgrids and Hybrid Microgrid Participants shall comply with the requirements of Rule No.XX, Microgrid Services Tariff, including Section H, Microgrid Operation.

~~E.~~F. NON-APPLICABILITY OF NEM RULES AND STATUTE

The Net Energy Metering program was closed to new applications by the Hawai‘i Public Utilities Commission as of October 12, 2015 via Decision and Order No. 33258 in Docket No. 2014-0192. While the NEM+ program is available to existing NEM customers, participation under the NEM+ program and the terms of the Standard Interconnection Agreement For NEM+ provided as Appendix I of this Rule are not governed by Rule No. 18 (Net Energy Metering) or the provisions of Hawaii Revised Statutes, Chapter 269, Part VI, relating to Net Energy Metering, except to the limited extent expressly provided in Section C.3 of this Rule. Under no circumstances shall a Customer-Generator increase the name-plate size of its existing NEM Facility under this program.

~~F.~~G. APPLICATION CHARGE

Each Eligible Customer-Generator submitting an application for service under this tariff shall pay a one-time application charge of $50.00 unless such application is submitted electronically via the Company’s online Customer Interconnection Tool, in which case no application charge will be assessed.

ATTACHMENT 7

MAUI COUNTY

Proposed Modification to
DER Tariff Rules:

Rule No. 14H
Rule No. 18
Rule No. 22 - 27

RULE No. 14 (Continued)

Service Connections and Facilities on Customer's Premises

H. INTERCONNECTION OF DISTRIBUTED GENERATING FACILITIES WITH THE COMPANY'S DISTRIBUTION SYSTEM

1. Interconnection Standards

a. Distributed generating facilities interconnected to the Company's electric system shall satisfy the Company's Interconnection Standards.

b. The Company's Interconnection Standards are included as Appendix I to Rule 14.

2. Definitions

For purposes of this Rule 14H, the following definitions shall apply:

a. "Distributed Generation Facility": A Generating Facility located on a Customer's premises that is interconnected with the Distribution System.

b. "Distribution System": All electrical wires, equipment and other facilities at the distribution voltage levels (such as 25kV-HECO only, 12kV, 4kV or 2.4kV) owned or provided by the utility, through which the utility provides electrical service to its customers.

c. "Generating Facility": Customer or utility-owned electrical power generation that is interconnected to the utility.

d. "Interconnect" or "interconnected" or "interconnection": The physical connection of any Distributed Generating Facility to the Distribution System, including the facilities required to provide the electric distribution service to a Customer, using electrical wires, switches, and related equipment located on either side of the point of common coupling as appropriate to their purpose and design to allow the physical connection of a Distributed Generating Facility to the Distribution System.

Docket No. 2014-0192; D&O No. 33258 filed October 12, 2015,
Transmittal Letter Dated October 19, 2015.

e. "Momentary Parallel Operation": Parallel Operation for a duration less than 100 ms.

f. "Parallel operation": The operation of a Distributed Generating Facility, while interconnected, such that customer load can be fed by the Distributed Generating Facility and Distribution System simultaneously.

3. Interconnection Agreement

a. Customers, on whose premises Distributed Generating Facilities that are interconnected to the Company's Distribution System are located, shall complete and execute Standard Interconnection Agreement with the Company provided in Appendix II or Appendix II-A of this Rule, or an Application for Non-Export Distributed Generation Facilities (Momentary-Parallel Operation) provided in Appendix II-B of this Rule, or other Company-approved application for interconnection of a Generating Facility subject to Rule 14H, and obtain Company approval of such interconnection application prior to interconnecting the Distributed Generating Facilities to the Company's Distribution System, or within one hundred fifty (150) days after the effective date of this Rule if the distributed generating facilities are already operating in parallel with the Company's system as of such date, provided that following the expiration of such one hundred fifty (150) days period, Customers shall have thirty (30) days to file a request for an extension of such one hundred fifty (150) days period with the Commission for good cause shown. The Company shall not deem the Customer to be in violation of Rule 14H while the Customer's request for extension of time to complete and execute the Standard Interconnection Agreement is under consideration by the Commission. Nothing in this provision shall affect the Company's right to refuse or discontinue service as provided in Rules 7.A.1 and 2.

Docket No. 2014-0192; D&O No. 33258 filed October 12, 2015,
Transmittal Letter Dated October 19, 2015.

b. Distributed Generating Facilities may be interconnected to the Company's Distribution System in accordance with the terms and conditions of the Standard Interconnection Agreement or other interconnection agreement approved by the Company.

c. The Standard Interconnection Agreement does not apply when (1) the Customer enters into a power purchase agreement for the sale to the Company of electric energy generated by the Distributed Generating Facility, or (2) the Customer enters into a standard agreement providing for net energy metering pursuant to Rule No. 18, (3) the customer submits an application for Non-Export Distributed Generation Facilities (Momentary-Parallel Operation) provided in Appendix II-B of this Rule, or (4) the Customer enters into any other standard interconnection agreement for a Generating Facility that is governed by Rule 14H. A customer that has an executed interconnection agreement with the Company as of the effective date of this rule shall not be required to enter into the Standard Interconnection Agreement until such time as the existing interconnection agreement is terminated.

d. Customers with Distributed Generating Facilities that are eligible for net energy metering pursuant to Chapter 269 of the Hawaii Revised Statutes, shall follow the rules and requirements set forth in Rule No. 18 for Net Energy Metering and this Rule No. 14H, as applicable.

e. Distributed Generating Facilities that incorporate the use of an energy storage device, e.g. battery storage, shall obtain an interconnection review by the Company pursuant to this Rule 14H and satisfy the Company's Interconnection Standards.

f. With respect to any purported assignment of a Company-approved interconnection agreement due to a change in ownership of the related Generating Facility, the Company may permit a Customer-Generator or Owner/Operator, as applicable, to complete, execute and return to Company an Assumption of DER Interconnection Agreement in a form acceptable to Company in lieu of executing a new interconnection agreement.

4. Interconnection Process

a. Customer requests to interconnect Distributed Generating Facilities to the Company's Distribution System under the Standard Interconnection Agreement provided in Appendix II or Appendix II-A, or other Company-approved application for interconnection of a Generating Facility subject to this Rule, will be processed in accordance with the procedures in the Interconnection Process Overview, which is included in Appendix III of this Rule.

b. Distributed Generating Facilities that are interconnected but will not operate in parallel with the Company's Distribution System, are not subject to the interconnection review process under this Rule 14H except that Customer shall register such Distributed Generation Facilities by completing and submitting an Application for Non-Export Distributed Generation Facilities provided in Appendix II-B to this Rule 14H. Such registration shall satisfy the Customer's notice requirements set forth in Tariff Rule 3B (Change In Customer's Equipment Or Operations) and is required for purposes of determining potential load that the Company may be required to serve.

c. Generators that are not interconnected with the Company's Distribution System are not subject to the interconnection review process under this Rule 14H and are not required to be registered with the Company.

d. The Interconnection Process Overview addresses the steps in the interconnection process, the technical review process, the need for additional study, and the resolution of disputes.

5. MICROGRIDS

a. Capitalized terms used in this section are as defined in Rule No. XX, Microgrid Services Tariff.

b. During Grid-Connected Mode, the Microgrid will be operated in parallel with the Company's System.

c. A Customer may operate its Generating Facility as part of a Customer Microgrid or be a participant in a Hybrid Microgrid.

d. A Customer who intends to operate its Generating Facility within a Customer Microgrid, or as a participant in a Hybrid Microgrid, shall notify the Company in its application through the Customer Interconnection Tool.

e. A Customer who operates its Generating Facility as part of a Microgrid after obtaining interconnection approval from the Company shall update its application through the Customer Interconnection Tool. Such notification and revision shall satisfy the Customer's notice requirements set forth in Tariff Rule 3B (Change in Customer's Equipment or Operations).

f. Customer Microgrids and Hybrid Microgrid Participants shall comply with the requirements of Rule No.XX, Microgrid Services Tariff, including Section H, Microgrid Operation.

RULE NO. 18

Net Energy Metering

A. ELIGIBLE CUSTOMER-GENERATOR

Net energy metering is available to permanent customers who own (or lease from a third party) and operate (or contract to operate with a third party) a solar, wind turbine, biomass, or hydroelectric energy generating facility, or a hybrid system consisting of two or more of these facilities, with a capacity of not more than one hundred kilowatts (100 kW) or greater amount as approved by Commission rule or order, that is:

1. located on the customer's premises,

2. operated in parallel with the Company's transmission and distribution facilities,

3. in conformance with the Company's interconnection requirements provided in Rule 14, Section H, and

4. intended primarily to offset part or all of the customer's own electrical requirements.

B. NET ENERGY METERING AGREEMENT AND INTERCONNECTION REQUIREMENTS

1. Eligible Customer-Generator with a generating facility with a capacity of 10 kW or Less shall complete and sign a standard Net Energy Metering Agreement Form (10 kW or Less) provided in Appendix I of this Rule, to receive net energy metering service. The Net Energy Metering Agreement shall not be effective until approved and executed by the Company. The Customer-Generator facility and interconnection systems must be in compliance with all applicable safety and performance standards of the National Electric Code (NEC), the Institute of Electrical and Electronic Engineers (IEEE), accredited testing laboratories such as Underwriters Laboratories (UL), and with Rule 14, Section H, Appendix I.

2. Eligible Customer-Generator with a generating facility with a capacity greater than 10 kW but not exceeding 100 kW shall complete and sign a standard Net Energy Metering and Interconnection Agreement (Greater than 10 kW But Less Than or Equal to 100 kW) provided in Appendix II of this Rule. The Net Energy Metering Agreement shall not be effective until approved and executed by the Company. The Customer-Generator facility and interconnection systems must be in compliance with all applicable safety and performance standards of the National Electric Code (NEC), the Institute of Electrical and Electronic Engineers (IEEE), accredited testing laboratories such as Underwriters Laboratories (UL), the Company’s interconnection requirements provided in Rule 14, Section H, Appendix I, and

Decision and Order No. 31901; Filed January 31, 2014.
Transmittal Letter Dated February 6, 2014.

subject to any other requirements provided in the standard Net Energy Metering and Interconnection Agreement.

RULE NO. 18 – Continued

Net Energy Metering

C. METERING AND BILLING

1. The Company, at its expense, may install meter(s) to record the flow of electric power in each direction. The customer shall, at its expense, provide, install and maintain all conductors, service switches, fuses, meter sockets, meter instrument transformer housing and mountings, switchboard meter test buses, meter panels and similar devices required for service connection and meter installations on the customer's premises in accordance with the Company's Rule 14, Section A.2.

2. Customers with Net Energy Metering service shall be billed monthly for the billing period, in accordance with the Company's Rule 8. Every 12 months, a reconciliation of the customer's net energy consumption supplied by the Company with the net energy produced by the Eligible Customer-Generator generating facility for that 12-month period will be performed as described in Section C.5.

   For customers with existing Net Energy Metering service, the measurement of kilowatthours supplied by the Company and the kilowatthours produced by the Eligible Customer-Generator for the first bill of the initial 12-month period under 2005 Haw. Sess. Laws Act 104 (effective July 1, 2005) shall begin at the start date of the billing period following the effective date of this tariff. For all other customers requesting Net Energy Metering service, the measurement of kilowatthours supplied by the Company and the kilowatthours produced by the Eligible Customer-Generator for the first bill of the initial 12-month period shall begin on the start date of the first billing period after the installation of the required meter(s).

3. When the electricity produced by the Eligible Customer-Generator generating facility during a billing period exceeds the electricity supplied by the Company for the same period, the customer is deemed to be a net electricity producer.

Docket No. 05-0037, D&O No. 22313 Dated March 9, 2006,
Transmittal Letter Dated March 16, 2006.

RULE NO. 18 – Continued

Net Energy Metering

In a billing period when the customer is deemed to be a net electricity producer, the customer will not be billed for the kilowatthours supplied by the Company during that billing period. For billing purposes, the customer shall instead be charged the Minimum Charge provided in the applicable rate schedule in effect during the billing period.

The excess kilowatthours produced by the Eligible Customer-Generator in each billing period, shall be carried over to the next billing period(s) within the current 12-month period, as a monetary credit and applied only to the Energy Charge, plus adjustments applicable to the Energy Charge, as well as adjustments based on kWh consumption, if any, for the customer's net kilowatthour consumption in the succeeding billing period within the current 12-month period. Adjustments applicable to the Energy Charge include the Power Factor Adjustment, the Supply Voltage Delivery Adjustment, the IRP Cost Recovery Adjustment, the Firm Capacity Surcharge, the Firm Capacity Surcharge Adjustment and other similar adjustments applicable to the Energy Charge that are in effect. Adjustments based on kWh consumption include the Energy Cost Adjustment, the Residential DSM Adjustment, the Commercial & Industrial DSM Adjustment, and other similar adjustments based on kWh consumption that are in effect. When the customer is billed the Minimum Charge in any billing period, the customer's cumulative net monetary credit shall <u>not</u> be applied to the Minimum Charge.

The customer's cumulative net monetary credit shall also not be applied to the Demand Charge, Customer Charge, and adjustments applicable to the Demand and Customer Charges,and other similar rate adjustments applicable to the Demand and Customer Charges that are in effect.

a. For customers served under Schedule R, the monetary credit for the excess kilowatthours produced by the Eligible Customer-Generator shall be calculated by multiplying the number of excess kilowatthours produced by the Eligible Customer-Generator by the Energy Charge (i.e., Non-Fuel Energy Charge plus the Base Fuel Energy Charge) provided in Schedule R, plus the adjustments applicable to the Energy Charge and the adjustments based on kWh consumption.

Docket No. 05-0037, D&O No. 22313 Dated March 9, 2006,
Transmittal Letter Dated March 16, 2006.

RULE NO. 18 – Continued

Net Energy Metering

b. For customers served under Schedule G, the monetary credit for the excess kilowatthours produced by the Eligible Customer-Generator shall be calculated by multiplying the excess kilowatthours produced by the Eligible Customer-Generator by the Energy Charge provided in Schedule G plus the adjustments applicable to the Energy Charge and the adjustments based on kWh consumption.

c. For customers served under the rate schedules with load-factor block energy rates, such as Schedule J, including those customers served under the load management Riders T, M, and I the monetary credit for the excess kilowatthours produced by the Eligible Customer-Generator shall be calculated by multiplying the excess kilowatthours produced by the Eligible Customer-Generator by the weighted average energy rate of the applicable rate schedule effective during the billing period, plus the adjustments applicable to the Energy Charge and the adjustments based on kWh consumption.

d. For customers served under Schedule U, the monetary credit for the excess kilowatthours produced by the Eligible Customer-Generator shall be calculated by multiplying the excess kilowatthours produced by the Eligible Customer-Generator by the weighted average energy rate of Schedule P, plus the adjustments applicable to the Energy Charge and the adjustments based on kWh consumption.

e. For customers served under the load management riders such as Rider T which provides energy rate adjustments to the Energy Charge in the applicable rate schedule, the customer’s net monetary credit, if any, shall be applied to the customer’s Energy Charge including the Energy Charge in the applicable rate schedule and the energy rate adjustments provided in the Rider, plus the adjustments applicable to the Energy Charge and the adjustments based on kWh consumption.

4. When the electricity supplied by the Company to the customer during a billing period exceeds the electricity produced by the Eligible Customer-Generator generating facility for the same period, and also exceeds any unused

Docket No. 05-0037, D&O No. 22313 Dated March 9, 2006,
Transmittal Letter Dated March 16, 2006.

RULE NO. 18 – Continued

Net Energy Metering

cumulative credits for excess electricity supplied by the Eligible Customer-Generator carried over from the prior months since the last 12-month reconciliation period, the customer is deemed to be a net electricity consumer.

For billing purposes, the customer shall be charged for the excess kilowatthours supplied by the Company based on the applicable rate schedule in effect during the billing period. The payment for excess kilowatthours supplied by the Company, however, will take into consideration any unused cumulative credits to the extent provided for in Section C.3. of this Rule 18.

In a billing period in which the customer is deemed to be a net electricity consumer, the customer will also be billed for other applicable charges, base rate adjustments and non-base rate adjustments, to the extent the amount exceeds the Minimum Charge; if such amount does not exceed the Minimum Charge, the customer will be billed the Minimum Charge, plus any rate adjustment that may apply to the Minimum Charge.

5. The kilowatthours supplied by the Company and the kilowatthours produced by the Eligible Customer-Generator for each billing period shall be recorded in each billing period of the 12-month period. Coincident with the last bill of the 12-month period following the start date of the customer's billing under the net energy metering contract, and for each 12-month period thereafter, the (i) Energy Charge plus adjustments applicable to the Energy Charge and adjustments based on kWh consumption, less any monetary credits applied during the 12-month period for net kilowatthours produced by the Eligible Customer-Generator ("Remaining Energy Charge Balance"), and (ii) the available cumulative credit balance (i.e., cumulative net monetary credit for net kilowatthours produced by the Eligible Customer-Generator for the 12-month period remaining after the subtraction of the monetary credits previously credited to the customer during the 12-month period for net kilowatthours produced by the Eligible Customer-Generator) will be compared to determine whether the customer is entitled to a refund of remaining Energy Charges plus adjustments applicable to the Energy Charge and adjustments

Docket No. 05-0037, D&O No. 22313 Dated March 9, 2006,
Transmittal Letter Dated March 16, 2006.

RULE NO. 18 – Continued

Net Energy Metering

based on kWh consumption. If the available cumulative credit balance equals, or exceeds the Remaining Energy Charge Balance, the Remaining Energy Charge Balance will be refunded. If the Remaining Energy Charge Balance is greater than the available cumulative credit balance at the end of the 12-month period, the amount of the refund will be capped at the available cumulative credit balance.

The Energy Charge shall include the customer's Energy Charge for each billing period within the 12-month period, plus adjustments applicable to the Energy Charge and adjustments based on kWh consumption, except for those billing periods when the customer was billed the Minimum Charge provided in the applicable rate schedule. Any monetary credits for excess kilowatthours produced by the Eligible Customer-Generator that remain unused at the end of each 12-month period shall expire and not be carried over to the next 12-month period. The customer shall not be compensated for such excess kilowatthours produced by the Eligible Customer-Generator unless the Company enters into a purchase power agreement with the Eligible Customer-Generator.

If an Eligible Customer-Generator terminates its Net Energy Metering service under Rule 18 prior to the end of any 12-month period, the Company shall reconcile the Energy Charge plus adjustments applicable to the Energy Charge and adjustments based on kWh consumption, less monetary credits previously applied, to the cumulative credit balance at the end of the billing period when service was terminated, similar to the reconciliation that would have been performed at the end of the normal 12-month period.

6. The kilowatthours supplied by the Company and, if any, the kilowatthours produced by the Eligible Customer-Generator, including an accounting of the cumulative monetary credits for the excess kilowatthours produced by the Eligible Customer-Generator since the last 12-month period reconciliation, the credits applied in each billing period of the current 12-month period and the remaining unused credits, if any, will be included in the customer's regular billing statement.

Docket No. 05-0037, D&O No. 22313 Dated March 9, 2006,
Transmittal Letter Dated March 16, 2006.

REVISED SHEET NO. 40F
Effective ~~February 6, 2014~~

RULE NO. 18 – Continued

Net Energy Metering

D. MAXIMUM NET ENERGY METERING CAPACITY

Net energy metering will be made available to customers on a first come first serve basis, and until the sum of the total rated generating capacity of all net metered customer facilities equals approximately 4.0% of the Company's current system peak demand or different level as approved by Commission rule or order, with 30% of the 4.0% system peak reserved for eligible Customer Generators with a generator capacity size of 10 kW or less.

E. INTERCONNECTION PROCESS

1. Eligible Customer-Generator requests to interconnect and operate a generating facility in parallel with the Company’s electric system will be processed in accordance with the procedures in the Interconnection Process Overview provided in Appendix III of this Rule. Under no circumstances shall a Customer-Generator interconnect and operate a generating facility in parallel with the Company’s electric system without prior written approval by the Company in the form of a fully executed Net Energy Metering Agreement.

2. Generating facilities that incorporate the use of an energy storage device, e.g. battery storage, regardless of whether such energy storage device is intended to operate in parallel with the Company’s transmission and/or distribution facilities, shall obtain an interconnection review by the Company pursuant to this Rule.

3. Energy storage systems that are intended to be installed by an Eligible Customer-Generator after Company’s execution of a Net Energy Metering Agreement shall constitute a material change and addition to a generating facility and shall require interconnection review pursuant to this Rule prior to installation.

4. The Interconnection Process Overview addresses the steps in the interconnection process, the technical review process, the need for additional study, and the resolution of the disputes.

F. MICROGRIDS

Decision and Order No. 31901; Filed January 31, 2014.
Transmittal Letter Dated February 6, 2014.

1. Capitalized terms used in this section are as defined in Rule No. XX, Microgrid Services Tariff.

RULE NO. 18 – Continued

Net Energy Metering

2. During Grid-Connected Mode, the Microgrid will be operated in parallel with the Company's System.

3. A Customer may operate its Generating Facility as part of a Customer Microgrid or be a participant in a Hybrid Microgrid.

4. A Customer who intends to operate its Generating Facility within a Customer Microgrid, or as a participant in a Hybrid Microgrid, shall notify the Company in its application through the Customer Interconnection Tool.

5. A Customer who operates its Generating Facility as part of a Microgrid after obtaining interconnection approval from the Company shall update its application through the Customer Interconnection Tool. Such notification and revision shall satisfy the Customer's notice requirements set forth in Tariff Rule 3B (Change in Customer's Equipment or Operations).

6. Customer Microgrids and Hybrid Microgrid Participants shall comply with the requirements of Rule No.XX, Microgrid Services Tariff, including Section H, Microgrid Operation.

Decision and Order No. 31901; Filed January 31, 2014.
Transmittal Letter Dated February 6, 2014.

Superseding Sheet No. 45
Effective August 18, 2016

REVISED SHEET NO. 45
Effective February 5, 2018
-Proposed Changes: January 17, 2021

Rule No. 22

CUSTOMER SELF-SUPPLY

A. ELIGIBLE CUSTOMER-GENERATOR

Customer Self-Supply service is available to permanent customers ("Eligible Customer-Generator") who own (or lease from a third party) and operate (or contract to operate with a third party) a solar generating facility ("Generating Facility" or "Self-Supply System"), with a capacity of not more than one hundred kilowatts (100 kW), and where:

1. The Generating Facility, which may include an energy storage system, is located on the Eligible Customer-Generator's premises,

2. The Generating Facility is sized and designed such that all of the Generating Facility's output is intended to offset all or part of the Eligible Customer-Generator's own electrical requirements ("Host Load"),

3. The Eligible Customer-Generator does not intend to export electrical energy to the utility system, except when permitted to provide Grid Support as set forth in Appendix II attached hereto,

4. The Generating Facility is in conformance with the Company's interconnection requirements provided in Rule No. 14, Paragraph H, and

5. The Generating Facility shall be designed and configured to meet the Technical Specifications set forth in Appendix II attached hereto.

B. INTERCONNECTION AGREEMENT AND REQUIREMENTS

1. Eligible Customer-Generator shall complete and sign an application for service and a Standard Interconnection Agreement For Self-Supply Systems (100 kW or less) provided as Appendix I of this Rule ("Interconnection Agreement"), to receive Customer Self-Supply service, which shall not be effective until approved and executed by the Company. Where the Eligible Customer-Generator is not the person or entity in whose name electric service is rendered for the Eligible Customer-Generator's premises where the Generating Facility is located, i.e. where a landlord-tenant relationship exists, only the Eligible Customer-Generator shall be required to complete and sign the application for service and the Interconnection Agreement.

2. The Eligible Customer-Generator's Generating Facility and interconnection systems must be in compliance with all applicable safety and performance standards of the National Electric Code (NEC), the Institute of Electrical and Electronic Engineers (IEEE), accredited testing laboratories such as Underwriters Laboratories (UL), the Company's interconnection requirements provided in Rule No. 14. Section H, Appendix I, and is subject to any other requirements provided in the Interconnection Agreement.

Rule No. 22 - Continued

CUSTOMER SELF-SUPPLY

C. METERING AND BILLING

1. The Company, at its expense, may install meter(s) to record the flow of electric power in each direction. The Eligible Customer-Generator shall, at its expense, provide, install and maintain all conductors, service switches, fuses, meter sockets, meter instrument transformer housing and mountings, switchboard meter test buses, meter panels and similar devices required for service connection and meter installations on the customer's premises in accordance with the Company's Rule No. 14, Section A.2.

2. Eligible Customer-Generators served under this tariff who also receive energy from the Company shall be billed monthly for the energy supplied by the Company, in accordance with the Company's Rule No. 8, the applicable rate schedule, and the Company's rules filed with the Commission.

3. All rates, terms, and conditions from the applicable rate schedule will apply except for the minimum charge. The minimum charge shall be as follows:

   Applicable Rate Schedule:

Schedule R, TOU-R, TOU EV	$25.00 per month
Schedule G, TOU-G,	$50.00 per month
Schedule J, TOU-J, U, SS	Per Rate Schedule
Schedule P	Per Rate Schedule
Schedule F	Per Rate Schedule
Schedule EV-R, EV-C, EV-F	Per Rate Schedule

4. Company's agreement to accept inadvertently exported electric power from the Generating Facility under this tariff is solely an accommodation. Neither this tariff nor the Interconnection Agreement provide for, require or otherwise obligate Company to measure, purchase, transmit, distribute, or store any electric power that may be delivered to Company's distribution system by Eligible Customer-Generator.

D. INTERCONNECTION PROCESS

1. Eligible Customer-Generator requests to interconnect and operate a Generating Facility in parallel with the Company's electric system will be processed in accordance with the procedures in the Interconnection Process Overview provided in Appendix III of Rule 14, Paragraph H. Generating Facilities that meet the Technical Specifications stated in Appendix II to this Rule shall qualify for expedited interconnection subject to the terms and conditions set forth in Company Rule 14, Section H, Appendix III.
2. Under no circumstances shall a Customer-Generator interconnect and operate a Generating Facility in parallel with the Company's electric system without prior written approval by the Company in the form of a fully executed Interconnection Agreement.

MAUI ELECTRIC COMPANY, LIMITED

Docket No. 2014-0192; D&O No. 33258 filed October 12, 2015,
Transmittal Letter Dated October 19, 2015.

Rule No. 22 - Continued

CUSTOMER SELF-SUPPLY

E. MICROGRIDS

1. Capitalized terms used in this section are as defined in Rule No. XX, Microgrid Services Tariff.

2. During Grid-Connected Mode, the Microgrid will be operated in parallel with the Company's System.

3. A Customer may operate its Generating Facility as part of a Customer Microgrid or be a participant in a Hybrid Microgrid.

4. A Customer who intends to operate its Generating Facility within a Customer Microgrid, or as a participant in a Hybrid Microgrid, shall notify the Company in its application through the Customer Interconnection Tool.

5. A Customer who operates its Generating Facility as part of a Microgrid after obtaining interconnection approval from the Company shall update its application through the Customer Interconnection Tool. Such notification and revision shall satisfy the Customer's notice requirements set forth in Tariff Rule 3B (Change in Customer's Equipment or Operations).

6. Customer Microgrids and Hybrid Microgrid Participants shall comply with the requirements of Rule No.XX, Microgrid Services Tariff, including Section H, Microgrid Operation.

Docket No. 2014-0192; D&O No. 33258 filed October 12, 2015,
Transmittal Letter Dated October 19, 2015.

Rule No. 23

CUSTOMER GRID SUPPLY

A. AVAILABILITY FOR CUSTOMER-GENERATORS

Customer Grid-Supply service is available to Eligible Customer-Generators who own or lease from a third party and operate or contract to operate with a third party a solar, wind turbine, biomass, or hydroelectric energy generating facility, or a hybrid system consisting of two or more of these facilities ("Generating Facility" or "Grid-Supply System"), with a capacity of not more than one hundred kilowatts (100 kW) and where:

1. The Generating Facility, which may include an energy storage system, is located on the Eligible Customer-Generator's premises,

2. The Generating Facility will be operated in parallel with the Company's transmission and distribution facilities,

3. The Generating Facility is in conformance with the Company's interconnection requirements provided in Rule No. 14, Paragraph H.

4. The Generating Facility is sized and designed such that all of the Generating Facility's output is intended to offset all or part of the Eligible Customer-Generator's own electrical requirements ("Host Load")

B. GRID SUPPLY INTERCONNECTION AGREEMENT

1. Eligible Customer-Generator shall complete and sign an application for service and a standard Grid-Supply Interconnection Agreement (100 kW or less) provided as Appendix I of this Rule ("Interconnection Agreement"), to receive Grid-Supply service. Where the Eligible Customer-Generator is not the person or entity in whose name electric service is rendered for the Eligible Customer-Generator's premises where the Generating Facility is located, i.e. where a landlord-tenant relationship exists, only the Eligible Customer-Generator shall be required to complete and sign the application for service and the Interconnection Agreement.

2. The Eligible Customer-Generator's Generating Facility and interconnection systems must be in compliance with all applicable safety and performance standards of the National Electric Code (NEC), the Institute of Electrical and Electronic Engineers (IEEE), accredited testing laboratories such as Underwriters Laboratories (UL), the Company's interconnection requirements provided in Rule No. 14. Section H, and is subject to any other requirements provided in the Interconnection Agreement.

Superseding Sheet No. 47A
Effective October 21, 2015

REVISED SHEET NO. 47A
Effective June 13, 2016

Rule No. 23

CUSTOMER GRID SUPPLY – Continued

C. METERING AND BILLING

1. The Company, at its expense, may install meter(s) to record the flow of electric power in each direction. The Eligible Customer-Generator shall, at its expense, provide, install and maintain all conductors, service switches, fuses, meter sockets, meter instrument transformer housing and mountings, switchboard meter test buses, meter panels and similar devices required for service connection and meter installations on the customer's premises in accordance with the Company's Rule No. 14, Section A.2.

2. Eligible Customer-Generators served under this tariff who also receive energy from the Company shall be billed monthly for the energy supplied by the Company, in accordance with the Company's Rule No. 8, the applicable rate schedule, and the Company's rules filed with the Commission.

3. All rates, terms, and conditions from the applicable rate schedule will apply except for the minimum charge. The minimum charge shall be as follows:

   Applicable Rate Schedule:

Schedule R, TOU-R, TOU EV	$25.00 per month
Schedule G, TOU-G,	$50.00 per month
Schedule J, TOU-J, U, SS	Per Rate Schedule
Schedule P	Per Rate Schedule
Schedule F	Per Rate Schedule
Schedule EV-F	Per Rate Schedule

4. The measurement of the kWh supplied by the Company to the Customer-Generator and the kWh received by the Company from the Customer shall begin on the date of installation of the required meter(s) or Company's approval to interconnect the Generating Facility, whichever comes later. Each subsequent billing month shall represent the Customer-Generator's reconciliation period.

5. All kWh received by the Company from the Eligible Customer-Generator shall be assigned Energy Credits. The Energy Credits for the billing period shall be calculated as the applicable Energy Credit Rate multiplied by the energy received by the Company from the Customer-Generator during the billing period, or the energy delivered by the Company to the Customer-Generator, whichever is less. The applicable Energy Credit Rates for each rate schedule shall be as follows:

Energy Credit Rates for Each Applicable Rate Schedule (Per Division):

Schedule	MAUI	LANAI	MOLOKAI	
R, TOU-R, TOU EV	17.16	27.88	24.07	cents per kWh
G, TOU-G	17.16	27.88	24.07	cents per kWh
J, TOU-J, U, SS, EV-F	17.16	27.88	24.07	cents per kWh
P	17.16	27.88	24.07	cents per kWh
F	17.16	27.88	24.07	cents per kWh

Energy Credit Rates shall be effective for a period of two (2) years from the effective date of this Grid-Supply Tariff. Thereafter, the applicable Energy Credit Rates shall be subject to any future modification by the Commission.

In each billing period, the Eligible Customer-Generator's available Energy Credits, shall be applied against the total of the electric bill calculated under the applicable rate schedule for the energy delivered by the Company to the Customer-Generator in the billing period. Such Energy Credits applied shall appear as a separate line item on the customer bill. Application of Energy Credits may only reduce the electric bill to an amount equal to the minimum charge for the applicable rate schedule.

6. Any Energy Credits that are not applied in each billing period shall be forfeited.

D. INTERCONNECTION PROCESS

1. Eligible Customer-Generator requests to interconnect and operate a Generating Facility in parallel with the Company's electric system will be processed in accordance with the procedures in the Interconnection Process Overview provided in Appendix III of Rule 14, Paragraph H.

2. Under no circumstances shall a Customer-Generator interconnect and operate a Generating Facility in parallel with the Company's electric system without prior written approval by the Company in the form of a fully executed Interconnection Agreement.

~~2.~~

Rule No. 23

CUSTOMER GRID SUPPLY – Continued

E. MICROGRIDS

1. Capitalized terms used in this section are as defined in Rule No. XX, Microgrid Services Tariff.

2. During Grid-Connected Mode, the Microgrid will be operated in parallel with the Company's System.

3. A Customer may operate its Generating Facility as part of a Customer Microgrid or be a participant in a Hybrid Microgrid.

4. A Customer who intends to operate its Generating Facility within a Customer Microgrid, or as a participant in a Hybrid Microgrid, shall notify the Company in its application through the Customer Interconnection Tool.

5. A Customer who operates its Generating Facility as part of a Microgrid after obtaining interconnection approval from the Company shall update its application through the Customer Interconnection Tool. Such notification and revision shall satisfy the Customer's notice requirements set forth in Tariff Rule 3B (Change in Customer's Equipment or Operations).

6. Customer Microgrids and Hybrid Microgrid Participants shall comply with the requirements of Rule No.XX, Microgrid Services Tariff, including Section H, Microgrid Operation.

Superseding Sheet No. 48A-1
Effective October 21, 2015

REVISED SHEET NO. 48A-1
Effective June 13, 2016

APPENDIX 1

GRID-SUPPLY INTERCONNECTION AGREEMENT

(100 kW or less)

This Grid-Supply Interconnection Agreement (100 kW or less) ("Agreement") is made by and between:

Maui Electric Company, Limited. ("Company"),

_____ ("Customer-Generator") and, if applicable,

_____ ("Owner/Operator"),

and is made, effective and binding as of To be filled out by the Company ("Effective Date"). Company and Customer-Generator may be referred to individually as a "Party" and collectively as the "Parties".

WHEREAS, Company is an operating electric public utility subject to the Hawaii Public Utilities Law, Hawaii Revised Statutes, Chapter 269, and the rules and regulations of the Hawaii Public Utilities Commission ("Commission");

WHEREAS, the Customer-Generator receives permanent service from the Company;

WHEREAS, the Customer-Generator qualifies as an "Eligible Customer-Generator," as defined in the Company's Customer Grid-Supply Tariff;

WHEREAS, the Customer-Generator intends to construct a generating facility, as further described herein ("Generating Facility") and desires to interconnect and operate the Generating Facility in parallel with the Company's electric system;

WHEREAS, the Owner/Operator, may be a person or entity other than the Customer-Generator, who owns and operates the Generating Facility.

NOW, THEREFORE, in consideration of the premises and the respective promises herein, the Company and the Customer-Generator, and if applicable, the Owner/Operator, hereby agree as follows:

1. **Notice and Disclaimer Regarding Future Rate and Tariff Modifications**. This Agreement shall, at all times, be subject to modification by the Commission as said Commission may, from time to time, direct in the exercise of its jurisdiction. Without limiting the foregoing, Customer-Generator expressly acknowledges the following:

   - The Grid Supply Tariff is subject to modification by the Hawaii Public Utilities Commission ("Commission"). **The credit rate associated with any electricity exported to the grid from your Generating Facility will be fixed for two (2) years from the**

effective date of the Grid-Supply Tariff. Thereafter, the applicable Energy Credit Rates shall be subject to any future modifications by the Commission.

- **Your Agreement and Generating Facility shall be subject to any future modifications ordered by the Commission. Such modifications may positively or negatively impact any potential savings in your electricity bill that were calculated by you or presented to you to support your decision to buy or lease a Generating Facility and may otherwise change the value of your Agreement and Generating Facility. You agree to pay for any costs related to such Commission-ordered modifications**.

BY SIGNING BELOW, YOU ACKNOWLEDGE THAT YOU HAVE READ, UNDERSTAND AND AGREE TO THE ABOVE NOTICE AND DISCLAIMER. FURTHER, BY SIGNING BELOW, YOU CONFIRM YOUR UNDERSTANDING THAT ANY POTENTIAL SAVINGS IN YOUR ELECTRICITY BILL THAT WERE CALCULATED BY YOU OR PRESENTED TO YOU TO SUPPORT YOUR DECISION TO BUY OR LEASE A GENERATING FACILITY MAY CHANGE.

2. **Effectiveness of Agreement**. This Agreement shall not be effective until approved and executed by each Party, i.e. upon the Effective Date. Customer-Generator shall not interconnect and operate the Generating Facility in parallel with the Company's system prior to approval and execution of this Agreement by the Company, except to extent necessary to obtain governmental or utility approvals. Until this Agreement is effective, no Party shall have any legal obligations arising hereunder, express or implied, and any actions taken by a Party in reliance on the terms of this Agreement prior to the Effective Date shall be at that Party's own risk.

3. **Term and Termination.** This Agreement shall continue on a month-to-month basis from the Effective Date. Customer-Generator may terminate this Agreement at any time with thirty (30) days' written notice. Company may terminate this Agreement at any time if Customer-Generator fails to comply with any term of this Agreement or if Customer-Generator fails to be an Eligible Customer-Generator.

4. **Generating Facility Description**. For the purposes of this Agreement, the "Generating Facility" is defined as the equipment and devices, and associated appurtenances, owned by the Customer-Generator, which produce electric energy for use by the Customer-Generator and are to be interconnected and operated in parallel with the Company's system. The Generating Facility is identified in Exhibits A (Description of Generating Facility and, if applicable, Exhibit A-1 (Description of Generating Facility- Additional Information) attached hereto.

5. **Scope of Agreement**. The Parties understand and agree that this Agreement applies only to the operation of Customer-Generator's Generating Facility described in Exhibit A attached hereto.

6. **Parallel Operation**. Company shall allow Customer-Generator to interconnect and operate the Generating Facility in parallel with the Company's distribution system in accordance with the terms and conditions of this Agreement and Company Rule 14, Paragraph H (Interconnection of

Distributed Generating Facilities Operating in Parallel With The Company's Electric System) ("Rule 14H").

7. **Permits and Licenses**. Customer-Generator shall be responsible for the design, installation, operation, and maintenance of the Generating Facility and shall obtain at its expense, and maintain any required governmental authorizations and/or permits for the construction and operation of the Generating Facility. Customer-Generator shall not commence parallel operation of the Generating Facility until Company has provided written approval. Company shall provide such written approval within fifteen (15) business days from Company's receipt of a copy of the final inspection or approval of the Generating Facility, which has been issued by the governmental authority having jurisdiction to inspect and approve the installation. Company's written approval shall not be unreasonably withheld. Company shall have the right to have its representatives present at the final inspection made by the governmental authority having jurisdiction to inspect and approve the installation of the Generating Facility. Customer-Generator shall be required to notify Company in accordance with the terms of Section 19 (Notices), herein, at least five (5) business days prior to such inspection.

8. **Installation**.

(a) Design, installation, operation and maintenance of the Generating Facility shall include appropriate control and protection equipment as specified by the Company, including but not limited to an automatic load-break device such as a circuit breaker or inverter and a manual disconnect that has a visible break or breaker with rack-out capability to isolate the Generating Facility from the Company's system. The manual disconnect device must be accessible by the Company and be capable of being locked by the Company in the open position, to establish working clearance for maintenance and repair work in accordance with the Company's safety rules and practices. The disconnect devices shall be furnished and installed by the Customer-Generator and are to be connected between the Generating Facility and the Company's electric system. The disconnect devices shall be located in the immediate vicinity of the electric meter serving the Customer-Generator. The manual disconnect device shall be, at a minimum, clearly labeled "Customer-Generator System Disconnect". With permission of the Company, the disconnect devices may be located at an alternate location which is readily and safely accessible to the Company on a 24-hour basis. Such alternate location shall be clearly identified with signage placed in the immediate vicinity of the electric meter serving the Customer-Generator.

(b) The Customer-Generator grants access to the Company to utilize the disconnect device, if needed. The Customer-Generator shall obtain the authorization from the owner and/or occupants of the premises where the Generating Facility is located that allows the Company to access the Generating Facility for the purpose specified in this Agreement. Company may enter premises where the Generating Facility is located, as permitted by law or tariff, for the following purposes: (a) to inspect Generating Facility's protective devices and read or test meter(s); and (b) to disconnect the Generating Facility and/or service to Customer-Generator, whenever in Company's sole opinion, a hazardous

condition exists and such immediate action is necessary to protect persons, Company's facilities, or property of others from damage or interference caused by the Generating Facility, or the absence or failure of properly operating protective device.

(c) Under no circumstances shall a Customer-Generator interconnect and operate a generating facility in parallel with the Company's electric system without prior written approval by the Company in the form of a fully executed Agreement.

(d) Once a Generating Facility is interconnected to the Company's system, the Company reserves the right to require the installation of, or modifications to, equipment determined by the utility to be necessary to facilitate the delivery of reliable electric service to its customers, subject to the requirement that such installation or modification be consistent with applicable interconnection standards (e.g., Rule 14H). The Company shall provide a written explanation of the need for such installation or modification. Such installation or modification shall be made by mutual agreement of the Company and the Customer-Generator. Any disputes related to this provision shall be resolved according to the dispute resolution process described in Rule 14H.

9. **Metering**. Within fifteen (15) days of execution of this Agreement, the Company will supply, own, and maintain all necessary meters and associated equipment utilized for billing and energy purchase. The meters will be tested and read in accordance with the rules of the Commission and the Company. The Customer-Generator, at its expense, shall provide, install and maintain all conductors, service switches, fuses, meter sockets, meter instrument transformer housing and mountings, switchboard meter test buses, meter panels and similar devices required for service connection and meter installations on the Customer-Generator's premises in accordance with the Company's Rule 14H.

10. **Interconnection Facilities**.

(a) Customer-Generator-Owned Interconnection Facilities (for Generating Facilities Larger than [30 kW] or with three-phase electrical service).

(1) The Customer-Generator shall furnish, install, operate and maintain, at its cost, the interconnection facilities (such as circuit breakers, relays, switches, synchronizing equipment, monitoring equipment, and control and protective devices and schemes) identified in Exhibit B (Customer-Generator-Owned Generating Facility and Interconnection Facilities).

(2) The point of interconnection is shown on the single-line diagram and three-line diagram (provided by the Customer-Generator and reviewed by the Company) which are attached to Exhibit B (Customer-Generator-Owned Generating Facility and Interconnection Facilities). Pursuant to Company Rule 14H, Appendix I (Distributed Generating Facility Interconnection Standards Technical Requirements), Section 6.c (Review of Design Drawings), the Company must review and approve Customer-Generator's single-line and three-line diagrams

prior to Customer-Generator constructing of the Generating Facility interconnection.

(3) The Customer-Generator agrees to test the Generating Facility, to maintain operating records, and to follow such operating procedures, as may be specified by the Company to protect the Company's system from damages resulting from the parallel operation of the Generating Facility, including such testing, records and operating procedures as more fully described in Exhibit C attached hereto.

(4) The Company may inspect the Generating Facility and Customer-Generator's interconnection facilities.

(b) Company-Owned Interconnection Facilities (for Generating Facilities Larger than 30 kW or with three-phase electrical service).

(1) The Company agrees to furnish, install, operate and maintain such interconnection facilities on its side of the point of interconnection with the Generating Facility as required for the parallel operation with the Generating Facility and more fully described in Exhibit C (Company-Owned Interconnection Facilities) attached hereto and made apart hereof ("Company Interconnection Facilities"). All Company Interconnection Facilities shall be the property of the Company. Where portions of the Company Interconnection Facilities are located on the Customer-Generator's premises, the Customer-Generator shall provide, at no expense to the Company, a suitable location for and access to all such equipment. If a 120/240 Volt power source or sources are required, the Customer shall provide these at no expense to the Company.

(2) The Customer-Generator agrees to pay to the Company: (1) a non-refundable contribution for the Company's investment in the Company Interconnection Facilities described in Exhibit C (Company-Owned Interconnection Facilities), subject to the terms and conditions included in Exhibit C and to pay for other interconnection costs. The interconnection costs will not include the cost of an initial technical screening of the impact of the Generating Facility on the Company's system.

11. **Indemnification:**

(a) The Customer-Generator shall indemnify, defend and hold harmless the Company and its officers, directors, agents and employees, from and against all liabilities, damages, losses, fines, penalties, claims, demands, suits, costs and expenses (including reasonable attorney's fees and expenses) to or by third persons, including the Company's employees or subcontractors, for injury or death, or for injury to property, arising out of the actions or inactions of the Customer-Generator (or those of anyone under its control or on its behalf) with respect to its obligations under this Agreement, and/or arising out of the

installation, operation and maintenance of the Generating Facility and/or the Customer-Generator Interconnection Facilities, except to the extent that such injury, death or damage is attributable to the gross negligence or intentional act or omission of the Company or its officers, directors, agents or employees.

(b) The Owner/Operator shall indemnify, defend and hold harmless the Company and its officers, directors, agents and employees, from and against all liabilities, damages, losses, fines, penalties, claims, demands, suits, costs and expenses (including reasonable attorney's fees and expenses) to or by third persons, including the Company's employees or subcontractors, for injury or death, or for injury to property, arising out of the actions or inactions of the Owner/Operator (or those of anyone under its control or on its behalf) with respect to its obligations under this Agreement, and/or arising out of the installation, operation and maintenance of the Generating Facility and/or the Interconnection Facilities, except to the extent that such injury, death or damage is attributable to the gross negligence or intentional act or omission of the Company or its officers, directors, agents or employees.

Provided, however, where the Customer-Generator is an agency of the United States, the following Section shall be applicable in place of Paragraphs 11(a) and (b):

"The United States understands that it may be held liable for loss, damages expense and liability to third persons and injury to or death of persons or injury to property caused by the United States in its engineering design, construction ownership or operations of, or the making of replacements, additions betterment to, or by failure of, any of such party's works or facilities used in connection with this Agreement to the extent allowed by the Federal Tort Claims Act 28 U.S.C. § 2671 et seq. and the Agreement Disputes Act of 1978, 41 U.S.C. §§ 601-613.

Company shall be responsible for damages or injury caused by Company, Company's agents, officers, and employees in the course of their employment to the extent permitted by law."

Provided, however, where the Customer-Generator is an agency of the State of Hawaii (the "State"), the following Section shall be applicable in place of Paragraphs 11(a) and (b):

"The State shall be responsible for damages or injury caused by the State's agents, officers, and employees in the course of their employment to the extent that the State's liability for such damage or injury has been determined by a court or otherwise agreed to by the State. The State shall pay for such damage and injury to the extent permitted by law. The State shall use reasonable good faith efforts to pursue any approvals from the Legislature and the Governor that may be required to obtain the funding necessary to enable the State to perform its obligations or cover its liabilities hereunder. The State shall not request Company to indemnify the State for, or hold the State harmless from, any claims for such damages or injury.

(c) Company shall be responsible for damages or injury caused by Company, Company's agents, officers, and employees in the course of their employment to the extent that Company's liability for such damage or injury has been determined by a court or otherwise agreed to by Company, and Company shall pay for such damage and injury to the extent permitted by law. Company shall not request the State to indemnify Company for, or hold Company harmless from, any claims for such damages or injury."

(d) The Company shall indemnify, defend and hold harmless the Customer-Generator, and its officers, directors, agents and employees, from and against all liabilities, damages, losses, fines, penalties, claims, demands, suits, costs and expenses (including reasonable attorney's fees and expenses) to or by third persons, including the Customer-Generator's employees or subcontractors, for injury or death, or for injury to property, arising out of the actions or inactions of the Company (or those of anyone under its control or on its behalf) with respect to its obligations under this Agreement, and/or arising out of the installation, operation and maintenance of the Company Interconnection Facilities, except to the extent that such injury, death or damage is attributable to the gross negligence or intentional act or omission of the Customer-Generator or its officers, directors, agents or employees.

(e) Nothing in this Agreement shall create any duty to, any standard of care with reference to, or any liability to any person not a party to it.

12. **Continuity of Service**.

(a) The Company may require the Seller to temporarily curtail, interrupt or reduce deliveries of energy when necessary in order for the Company to construct, install, maintain, repair, replace, remove, investigate, test or inspect any of its equipment or any part of the Company System including, but not limited to, accommodating the installation and/or testing of non-utility owned facilities to the Company system; or if the Company determines that such curtailment, interruption or reduction is necessary because of a system emergency, forced outage, operating conditions on its system; or the inability to accept deliveries of energy due to excess energy conditions; or if either the Generating Facility does not operate in compliance with good engineering and operating practices or acceptance of energy from the Seller by the Company would require the Company to operate the Company system outside of good engineering and operating practices which in this case shall include, but not be limited to, excessive system frequency fluctuations or excessive voltage deviations, and any situation that the Company system operator determines, at his or her sole discretion, could place in jeopardy system reliability.

(b) In the event that the Company temporarily curtails, interrupts, or reduces deliveries of energy pursuant to Section 12(a), the Company shall not be obligated to accept or apply credit for any energy from the Seller except for such energy that the Company notifies the Seller that it is able to take during this period. The Company shall take all reasonable steps to minimize the number and duration of interruptions, curtailments or reductions.

Whenever feasible, Company shall give Seller reasonable notice of the possibility that interruption or reduction of deliveries may be required.

(c) In the event that the Company temporarily curtails or interrupts deliveries of energy from the Generating Facility pursuant to this Section 12, the Generating Facility shall not energize a de-energized utility line under any circumstances, but may operate the Generating Facility isolated from the utility system with an open tie point in accordance with Section 4.1 of Appendix I to Rule 14H.

13. **Personnel and System Safety**. If at any time the Company determines that the continued operation of the Generating Facility may endanger any person or property, the Company's electric system, or have an adverse effect on the safety or power quality of other customers, the Company shall have the right to disconnect the Generating Facility from the Company's electric system remotely or otherwise. The Generating Facility shall remain disconnected until such time as the Company is satisfied that the endangering or power quality condition(s) has been corrected, and the Company shall not be obligated to accept any energy from the Generating Facility during such period. The Company shall not be liable, directly or indirectly, for permitting or continuing to allow an attachment of the Generating Facility for the acts or omissions of the Customer-Generator that cause loss or injury, including death, to any third party.

14. **Prevention of Interference**. The Customer-Generator shall not operate equipment that superimposes a voltage or current upon the Company's system that interferes with the Company's operations, service to the Company's customers, or the Company's communication facilities. Such interference shall include, but not be limited to, overcurrent, voltage imbalance, and abnormal waveforms. If such interference occurs, the Customer-Generator must diligently pursue and take corrective action at its own expense after being given notice and reasonable time to do so by the Company. If the Customer-Generator does not take timely corrective action, or continues to operate the equipment causing interference without restriction or limit, the Company may, without liability, disconnect the Customer-Generator's equipment from the Company's system.

15. **Limitation of Liability**. Neither by inspection, if any, or non-rejection, nor in any other way, does the Company give any warranty, express or implied, as to the adequacy, safety, or other characteristics of any structures, equipment, wires, appliances or devices owned, installed or maintained by the Customer-Generator or leased by the Customer-Generator from third parties, including without limitation the Generating Facility and any structures, equipment, wires, appliances or devices appurtenant thereto.

16. **Customer-Generator and Generating Facility Information.** By signing this Agreement, the Customer-Generator expressly agrees and authorizes the Company to: (1) request and obtain from Customer-Generator and its contractors, vendors, subcontractors, installers, suppliers or agents (collectively "Customer-Generator Agents"), at no cost to Company, information related

to the Generating Facility, including but not limited to Watts, Vars, Watt Hours, current and voltage, status of the generating facility, inverter settings, any and all recorded event or alarm logs recorded, (collectively "Generating Facility Data") that Company reasonably determines are needed to ensure the safe and reliable operation of the Generating Facility or the Company's system; or (2) make such modifications to the Customer-Generator's system, at no cost to the Company, that Company determines, in its reasonable discretion, are needed to ensure the safe and reliable operation of the Generating Facility or the Company's system. Customer-Generator expressly agrees and irrevocably authorizes Customer-Generator Agents to disclose such Customer-Generator Data to Company and to make such modifications to the Customer-Generator's Generating Facility upon request by Company.

17. **Additional Information**. The Company reserves the right to request additional information from Customer-Generator relating to the Generating Facility, where reasonably necessary, to serve the Customer-Generator under this Agreement or to ensure reliability, safety of operation, and power quality of the Company's system.

18. **No Material Changes to Generating Facility**. The Customer-Generator agrees that no material changes or additions to the Generating Facility shall be made without having obtained prior written consent from the Company, which consent shall not be unreasonably withheld. In no event may the Total Rated Capacity of the Generating Facility exceed 100 kW. If a Generating Facility changes ownership, the Company may require the new Customer-Generator and/or Owner/Operator to complete and execute an amended Agreement or new Agreement, as may be applicable.

19. **Notices**. Any notice required under this Agreement shall be in writing and mailed at any United States Post Office with postage prepaid and addressed to the Party, or personally delivered to the Party, at the address identified on the last page of the Agreement. Changes in such designation may be made by notice similarly given. Notice sent by mail shall be deemed to have been given on the date of actual delivery or at the expiration of the fifth day after the date of mailing, whichever is earlier.

20. **Certification by Licensed Electrical Contractor**. Generating and interconnection systems must comply with all applicable safety and performance standards of the National Electrical Code (NEC), Institute of Electrical and Electronic Engineers (IEEE), and accredited testing laboratories such as the Underwriters Laboratories (UL), and where applicable, the rules of the Commission, or other applicable governmental laws and regulations, and the Company's interconnection requirements, in effect at the time of signing this agreement. This requirement shall include, but not be limited to, the interconnection provisions of the Company's Rule 14H, as authorized by the Commission. Upon request by Company, Customer-Generator shall cause a Licensed Electrical Contractor, as agent for Customer-Generator, to certify that once approved by the Company, the proposed Generating Facility will be installed to meet all preceding requirement(s).

21. **Force Majeure**. For purposes of this Agreement, "Force Majeure Event" means any event: (a) that is beyond the reasonable control of the affected party; and (b) that the affected party is unable to prevent or provide against by exercising reasonable diligence, including the following events or circumstances, but only to the extent they satisfy the preceding requirements: (a) acts of war, public disorder, insurrection or rebellion; floods, hurricanes, earthquakes, lighting, storms, and other natural calamities; explosions or fires; strikes, work stoppages, or labor disputes; embargoes ; and sabotage. If a Force Majeure Event prevents a party from fulfilling any obligations under this Agreement, such party will promptly notify the other party in writing, and will keep the other party informed on a continuing basis of the scope and duration of the Force Majeure Event. The affected party will specify in reasonable detail the circumstances of the Force Majeure Event, its expected duration, and the steps that the affected party is taking to mitigate the effects of the event on its performance. The affected part will be entitled to suspend or modify its performance of obligations under this Agreement, other than the obligation to make payments then due or becoming due under this Agreement, but only to the extent that the effect of the Force Majeure Event cannot be mitigated by the use of reasonable efforts. The affected party will use reasonable efforts to resume its performance as soon as possible.

22. **Good Engineering Practice**.

    (a) Each party agrees to install, operate and maintain its respective equipment and facilities and to perform all obligations required to be performed by such party under this Agreement in accordance with good engineering practice in the electric industry and with applicable laws, rules, orders and tariffs.

    (b) Wherever in this Agreement and the attached Exhibits the Company has the right to give specifications, determinations or approvals, such specifications, determinations and/or approvals shall be given in accordance with the Company's standard practices, policies and procedures, which may include the Company's Electric Service Installation Manual, the Company's Engineering Standard Practice Manual and the IEEE Guides and Standards for Protective Relaying Systems.

23. **Insurance**. The following insurance provisions are only applicable to Generating Facilities with a Total Rated Capacity greater than 10 kW but not exceeding 100 kW:

    The Customer-Generator shall, at its own expense and during the term of the Agreement and any other time that the Generating Facility is interconnected with the Company's system, maintain in effect with a responsible insurance company authorized to do insurance business in Hawaii, the following insurance or its equivalent at Company's discretion that will protect the Customer-Generator and the Company with respect to the Generating Facility, the Generating Facility's operations, and the Generating Facility's interconnection with the Company's system:

    A commercial general liability policy, covering bodily injury and property damage combined single limit of at least the following amounts based on the Total Rated Capacity of the generator (for solar systems—Total Rated Capacity of the generator or inverter, whichever is lower, can be used with appropriate technical documentation on inverter, if not higher Total Rated Capacity will be used), for any occurrence.

Commercial General Liability Coverage Amount	Total Rated Capacity of the Generating Facility
$1,000,000	Greater than 30 kW and less than or equal to 100 kW
$500,000	Greater than 10 kW and less than or equal to 30 kW

The Customer-Generator has responsibility to determine if higher limits are desired and purchased. Said insurance shall name the Company, its directors, officers, agents, and employees as additional insureds, shall include contractual liability coverage for written Agreements and agreements including this Agreement, and shall include provisions stating that the insurance will respond to claims or suits by additional insureds against the Customer-Generator or any other insured thereunder. Customer-Generator shall immediately provide written notice to the Company should the required insurance be cancelled, limited in scope, or not renewed upon expiration. "Claims made" policies are not acceptable, unless the Customer-Generator agrees to maintain coverage in full effect at all times during the term of this Agreement and for THREE (3) years thereafter. The adequacy of the coverage afforded by the required insurance shall be subject to review by the Company from time to time, and if it appears in such review that risk exposures require an increase in the coverages and/or limits of this insurance, the Customer-Generator shall make such increase to that extent and any increased costs shall be borne by the Customer-Generator. The insurance required hereunder shall provide that it is primary with respect to the Customer-Generator and the Company. The Customer-Generator shall provide evidence of such insurance, including insurer's acknowledgement that coverage applies with respect to this Agreement, by providing certificates of insurance to the Company within 30 days of any change. Initially, certificates of insurance must be provided to the Company prior to executing the Agreement and any parallel interconnection. The Customer- Generator's indemnity and other obligations shall not be limited by the foregoing insurance requirements. Any deductible shall be the responsibility of the Customer-Generator.

Alternatively, where the Customer-Generator is a governmental entity, Customer Generator may elect to be self-insured for the amounts set forth above in lieu of obtaining insurance coverage to those levels from an insurance company.

24. **Miscellaneous.**

(a) **Disconnection and Survival of Obligations.** Upon termination of this Agreement, the Generating Facility shall be disconnected from the Company's system. The termination of this Agreement shall not relieve the Parties of their respective liabilities and obligations, owed or continuing at the time of termination.

(b) **Governing Law and Regulatory Authority.** This Agreement was executed in the State of Hawaii and must in all respects be interpreted, governed, and construed under the laws of the State of Hawaii. This Agreement is subject to, and the parties' obligations hereunder include, operating in full compliance with all valid, applicable federal, state,

and local laws or ordinances, and all applicable rules, regulations, orders of, and tariffs approved by, duly constituted regulatory authorities having jurisdiction.

(c) **Amendment, Modifications, or Waiver**. This Agreement may not be altered or modified by either of the Parties, except by an instrument in writing executed by each of them. None of the provisions of this Agreement shall be considered waived by a Party unless such waiver is given in writing. The failure of a Party to insist in any one or more instances upon strict performance of any of the provisions of this Agreement or to take advantage of any of its rights hereunder shall not be construed as a waiver of any such provisions or the relinquishment of any such rights for the future, but the same shall continue and remain in full force and effect. This Agreement contains the entire agreement and understanding between the Parties, their agents, and employees as to the subject matter of this Agreement. Each party also represents that in entering into this Agreement, it has not relied on any promise, inducement, representation, warranty, agreement or other statement not set forth in this Agreement.

(d) **Termination of Existing Agreement**. This Agreement shall supersede any existing agreement, if any, under which Customer-Generator is currently operating the Generating Facility and any such agreement shall be deemed terminated as of the date this Agreement becomes effective.

(e) **Assignment.** This Agreement may not be assigned by either Party without the prior written consent of the other party. Such consent shall not be unreasonably withheld.

(f) **Binding Effect.** This Agreement shall be binding upon and inure to the benefit of the parties hereto and their respective successors, legal representatives, and permitted assigns.

(g) **Relationship of Parties**. Nothing in this Agreement shall be deemed to constitute any Party hereto as partner, agent or representative of the other party or to create any fiduciary relationship between the Parties.

(h) **Limitations**. Nothing in this Agreement shall limit the Company's ability to exercise its rights or expand or diminish its liability with respect to the provision of electrical service pursuant to the Company's tariffs as filed with the Commission, or the Commission's Standards for Electric Utility Service in the State of Hawaii, which currently are included in the Commission's General Order Number 7, as either may be amended from time to time.

(i) **Execution of Agreement; Multiple Counterparts**. This Agreement may be executed in two or more counterparts, each of which is deemed an original but all constitute one and the same instrument binding all Parties notwithstanding that all of the Parties are not signatories to the same counterparts. Signatures may be provided in original ("wet") form or by other means intended to preserve the original graphic and pictorial appearance of the signature, such as as photocopy. A copy of a Party's signature shall be considered an "original" signature for purposes of this Agreement.

MAUI ELECTRIC COMPANY, LIMITED

25. **Generator/Equipment Certification**

Generating Facilities that utilize inverter technology must be compliant with *Institute of Electrical and Electronics Engineers IEEE Std 1547* and *Underwriters Laboratories UL 1703* and *UL 1741* in effect at the time this Agreement is executed. Generating systems that use a rotating machine must be compliant with applicable National Electrical Code, Underwriters Laboratories, and Institute of Electrical and Electronics Engineers standards and rules and orders of the Public Utilities Commission of the State of Hawaii in effect at the time this Agreement is executed. By signing below, the Applicant certifies that the installed generating equipment will meet the appropriate preceding requirement(s) and can supply documentation that confirms compliance, including a certification of the same from the Installing Electrical Contractor upon request by the Company.

IN WITNESS WHEREOF, the Parties hereto have caused two originals of this Agreement to be executed by their duly authorized representatives. This Agreement is effective as of the date first set forth above.

CUSTOMER-GENERATOR

By: _____ _____
Signature Date

Name (Print): _____

Company Name
(if applicable): _____

Title (if applicable): _____

OWNER/OPERATOR
(if different from Customer-Generator) ☐ Not Applicable

By: _____ _____
Signature Date

Name (Print): _____

Company Name
(if applicable): _____

Title (if applicable): _____

MAUI ELECTRIC COMPANY

By: To be filled out by the Company To be filled out by the Company
Signature Date

Name (Print): To be filled out by the Company

Title: To be filled out by the Company

MAILING ADDRESS

Maui Electric Company, LTD.
Attn: Renewable Energy Projects Division
P.O. Box 398
Kahului, HI 96733-6898

Superseding Sheet No. 48A-15
Effective October 21, 2015

REVISED SHEET NO. 48A-15
Effective June 13, 2016

EXHIBIT A

DESCRIPTION OF GENERATING FACILITY

Under no circumstances shall a Customer-Generator interconnect and operate a generating facility in parallel with the Company's electric system without prior written approval by the Company in the form of a fully executed Agreement. Generating facilities that incorporate the use of an energy storage device, e.g. battery storage, regardless of whether such energy storage device is intended to operate in parallel with the Company's transmission and/or distribution facilities, shall obtain an interconnection review by the Company pursuant to this Agreement. Energy storage systems that are intended to be installed by an Eligible Customer-Generator after Company's execution of an Agreement shall constitute a material change and addition to a generating facility and shall require interconnection review pursuant to this Rule prior to installation.

1. Customer-Generator Information

Name (print): _____

Property Address: _____

City: _____ State: _____ Zip: _____

Active Electric
Service Account #: _____ Meter #: _____ TMK: _____

Phone: _____ Cell: _____ Email: _____

☐ Mailing Address is the same as the Property Address

Mailing Address: _____

City: _____ State: _____ Zip: _____

2. Owner-Operator Information ☐ Not Applicable

Name (print): _____

Company:
(If applicable) _____

Mailing Address: _____

City: _____ State: _____ Zip: _____

Phone: _____ Cell: _____ Email: _____

3. Electrical Contractor

Electrical Contractor: _____ Hawai`i License #: _____

Superseding Sheet No. 48A-16
Effective October 21, 2015

REVISED SHEET NO. 48A-16
Effective June 13, 2016

Mailing Address: _____

City: _____ State: _____ Zip: _____

Phone: _____ Cell: _____ Email: _____

Supply certification that the generating system will be installed and inspected in compliance with the local Building/Electrical code of the County of: ☐ Honolulu ☐ Maui ☐ Hawai`i

Generating System Building Permit # (to be filled out by the Company upon the Company's approval and execution of Agreement): To be filled out by the Company

Interconnection Date (to be filled out by the Company upon the Company's approval and execution of the Agreement): To be filled out by the Company

4. Insurance ☐ Not Applicable (less than 10 kW)

Insurance Carrier: _____

5. General Technical Information (Attached)

☐ **Single Line Diagram** (if the Generating Facility is less than 30 kW)

☐ **Three Line Diagram** (if the Generating Facility's capacity is greater than or equal to 30 kW)

☐ **Relay List and Trip Scheme** (if applicable)

6. Generator Qualifications

Check all that apply (include Exhibit A-1 for all but Photovoltaic):

☐ Photovoltaic ☐ Wind Turbine ☐ Hydroelectric ☐ Biomass ☐ Hybrid (describe): _____

Generator Type:

☐ Photovoltaic with DC Inverter ☐ Non-Photovoltaic DC Generator (include Exhibit A-1) ☐ Synchronous (include Exhibit A-1) ☐ Induction (include Exhibit A-1)

☐ No ☐ Yes (include Exhibit A-1)

What is the system's Maximum Export capability?

☐ Less than 30 kW

Maximum Generating Capability: _____ kW Maximum Export: _____ kW

☐ Greater than or equal to 30 kW but less than or equal to 100 kW (include Exhibit A-1and Exhibit B)

Maximum Generating Capability: _____ kW Maximum Export: _____ kW

Maximum Site Load without Generation: _____ kW Minimum Site Load without Generation: _____ kW

7. Interconnecting Equipment Technical Data

Generator Disconnect Information:

Manufacturer: _____ Catalog #: _____

Superseding Sheet No. 48A-17
Effective October 21, 2015

REVISED SHEET NO. 48A-17
Effective June 13, 2016

Type: _____ Rated Amps: _____ Rated Volts: _____

☐ Fused *or* ☐ Non-Fused | ☐ Single Phase *or* ☐ Three Phase (include Exhibit A-1) | ☐ Uses multiple disconnects

Mounting Location: _____

Will an interposing transformer be used between the generator and the point of interconnection?
☐ No ☐ Yes (include Exhibit A-1)

8. Generator Technical Information

Photovoltaic System Information:

Micro Inverter	Central/String Inverter	Inverter Manufacturer	Model	Qty.	Peak AC Output Rating (kW)*	Quantity x Peak AC Output Rating (kW)
☐ 1	☐ 1					
☐ 2	☐ 2					
☐ 3	☐ 3					
☐ 4	☐ 4					
☐ 5	☐ 5					
					Total Inverter Capacity (kW):	

Micro Inverter	Central/String Inverter	Module Manufacturer	Model	Qty.	STC Rating (kW)*	Quantity x STC Rating (kW)
☐ 1	☐ 1					
☐ 2	☐ 2					
☐ 3	☐ 3					
☐ 4	☐ 4					
☐ 5	☐ 5					
					Total Module Capacity (kW):	

Total Capacity of Inverter #:	1:	2:	3:	4:	5:
				Total System Capacity (kW):	

Total System Capacity is the combined sums of the lesser of the AC or DC capacities per inverter.

*All equipment ratings must match those listed on their manufacturer's specification sheets.

Superseding Sheet No. 48A-18
Effective October 21, 2015

REVISED SHEET NO. 48A-18
Effective June 13, 2016

EXHIBIT A-1

DESCRIPTION OF GENERATING FACILITY – ADDITIONAL INFORMATION

[ADDITIONAL INFORMATION FOR GENERATING FACILITIES THAT: (1) INCLUDE AN ENERGY STORAGE SYSTEM; (2) INCLUDE NON-PHOTOVOLTAIC GENERATORS; OR (3) HAVE A TOTAL SYSTEM CAPACITY GREATER THAN 30 KW OR THREE-PHASE ELECTRICAL SERVICE]

1. Energy Storage System Information ☐ Not Applicable

Specification sheets must be provided for all equipment listed in the section below

Description of Energy Storage System Operations:

Manufacturer: _____ Model: _____

Size kW: _____ Max Capacity kWh: _____

Rated kW discharge: Rated kW charge:

Will the energy storage system be used only as an Emergency Backup System?
☐ No ☐ Yes

Describe mode(s) of operation (e.g. charge and discharge timing; does the system match the load with PV and battery?)

_____

_____

Will the distribution grid be used to charge the storage device?
☐ No ☐ Yes, charging periods: _____

Will power be exported to the grid?
☐ No ☐ Yes, maximum export to the grid: _____

2. Wind Generator System Information ☐ Not Applicable

Specification sheets must be provided for all equipment listed in the section below

DC Generator Manufacturer	Model	Qty.	Rating (kW)	Quantity x Rating (kW)
			Total DC Generator Capacity (kW):	
Inverter Manufacturer	Model	Qty.	Rating (kW)	Quantity x Rating (kW)
			Total Inverter Capacity (kW):	
			Total System Capacity (kW):	
			Fault Current Contribution of Generator (Amps):	

3. Technical Information for Synchronous and Induction Generators ☐ Not Applicable

Specification sheets must be provided for all equipment referenced in the section below

Number of starts per day: _____ Maximum Starting kVA: _____ Generator Operating Power Factor: _____

☐ Effectively Grounded ☐ Resonant Grounded ☐ Low-Inductance Grounded ☐ Low-Resistance Grounded ☐ High-Resistance Grounded ☐ Ungrounded

Generator Characteristic Data*:

* Not needed if Generator Nameplate and Manufacturer's Specification Sheet are provided.

Direct Axis Synchronous Reactance, X_d: _____ P.U. Direct Axis Transient Reactance, X'_d: _____ P.U.

Direct Axis Subtransient Reactance, X''_d: _____ P.U. Inertia Constant, H: _____ P.U. Excitation Response Ratio: _____

Direct Axis Open-Circuit Transient Time Constant, X_d: _____ Seconds Direct Axis Open-Circuit Subtransient Time Constant, T"do: _____ Seconds

4. Interconnecting Equipment Technical Data

Transformer Data ☐ Not Applicable

A copy of transformer Nameplate and Manufacturer's Test Report may be substituted

Transformer Primary (Volts): _____ Transformer Secondary (Volts): _____

☐ Delta ☐ Wye ☐ Wye Grounded ☐ Delta ☐ Wye ☐ Wye Grounded

Size: _____ KVA Transformer Impedance: _____ % on _____ KVA Base

Transformer Fuse Data ☐ Not Applicable

Attach fuse manufacturer's Minimum Melt & Total Clearing Time-Current Curves

☐ At Primary Voltage ☐ At Secondary Voltage

Manufacturer: _____ Type: _____ Size: _____ Speed: _____

Transformer Protection (if not fuse) ☐ Not Applicable

Please describe: _____

Generator Main Circuit Breaker ☐ Not Applicable

A copy of circuit breaker's Nameplate and Specification Sheet may be substituted

Manufacturer: _____ Type: _____

Continuous Load Rating (Amps): _____ Interrupting Rating (Amps): _____ Trip Speed (Cycles): _____

Feeder Circuit Breaker ☐ Not Applicable

Attach copy of any proposed Time-Overcurrent Coordination Curves

Manufacturer	Type	Style/Catalog No.	Proposed Setting

Superseding Sheet No. 48A-20
Effective October 21, 2015

REVISED SHEET NO. 48A-20
Effective June 13, 2016

Current Transformer Data ☐ Not Applicable

Attach copy of Manufacturer's Excitation & Ratio Correction Curves

Manufacturer	Type	Accuracy Class	Proposed Ration Connection
			/5
			/5
			/5
			/5
			/5

EXHIBIT B

CUSTOMER-GENERATOR-OWNED GENERATING FACILITY AND INTERCONNECTION FACILITIES

[THIS EXHIBIT IS ONLY APPLICABLE TO GENERATING FACILITIES EQUAL TO OR GREATER THAN 30 kW OR WITH THREE-PHASE ELECTRICAL SERVICE. DO NOT INCLUDE THIS EXHIBIT IF NOT APPLICABLE.]

1. Generating Facility

a. Compliance with laws and standards. The Generating Facility, Generating Facility design, and Generating Facility drawings shall meet all applicable national, state, and local laws, rules, regulations, orders, construction and safety codes, and shall satisfy the Company's Distributed Generating Facility Interconnection Standards, Technical Requirements ("Interconnection Standards"), as set forth in Rule 14, Paragraph H.1 of the Company's tariff.

b. Avoidance of adverse system conditions. The Generating Facility shall be designed, installed, operated and maintained so as to prevent or protect against adverse conditions on the Company's system that can cause electric service degradation, equipment damage, or harm to persons, such as:

- Unintended islanding.
- Inadvertent and unwanted re-energization of a Company dead line or bus.
- Interconnection while out of synchronization.
- Overcurrent.
- Voltage imbalance.
- Ground faults.
- Generated alternating current frequency outside of permitted safe limits.
- Voltage outside permitted limits.
- Poor power factor or reactive power outside permitted limits.
- Abnormal waveforms.

c. Specification of protection, synchronizing and control requirements. The Customer-Generator shall provide the design drawings, operating manuals, manufacturer's brochures/instruction manual and technical specifications, manufacturer's test reports, bill of material, protection and synchronizing relays and settings, and protection, synchronizing, and control schemes for the Generating Facility to the Company for its review, and the Company shall have the right to specify the protection and synchronizing relays and settings, and protection, synchronizing and control schemes that affect the reliability and safety of operation and power quality of the Company's system with which the Generating Facility is interconnected ("Facility Protection Devices/Schemes").

d. **Generating Facility protection**. The Customer-Generator is solely responsible for providing adequate protection for the Generating Facility.

e. **Customer-Generator Interconnection Facilities**.

(i) The Customer-Generator shall furnish, install, operate and maintain interconnection facilities (such as circuit breakers, relays, switches, synchronizing equipment, monitoring equipment, and control and protective devices and schemes) designated by or acceptable to the Company as suitable for parallel operation of the Generating Facility with the Company's system ("Customer-Generator Interconnection Facilities"). Such facilities shall be accessible at all times to authorized Company personnel.

(ii) The Customer-Generator shall comply with the Company's Interconnection Standards.

(iii) 1) Single-line diagram of the Generating Facility, 2) relay list, trip scheme and settings of the Generating Facility, 3) Generating Facility Equipment List, and 4) three-line diagram (if the Generating Facility's capacity is greater than or equal to 30 kW), which identify the circuit breakers, relays, switches, synchronizing equipment, monitoring equipment, and control and protective devices and schemes, shall, after having obtained prior written consent from the Company, be attached to Exhibit A and made a part hereof at the time the Agreement is signed. The single-line diagram shall include pertinent information regarding operation, protection, synchronizing, control, monitoring, and alarm requirements. The single-line diagram and three-line diagram shall expressly identify the point of interconnection of the Generating Facility to the Company's system. The relay list, trip scheme and settings shall include all protection, synchronizing and auxiliary relays that are required to operate the Generating Facility in a safe and reliable manner. The three-line diagram shall show potential transformer and current transformer ratios, and details of the Generating Facility's configuration, including relays, meters, and test switches.

f. **Approval of Design Drawings**. If the Generating Facility's capacity is greater than or equal to 30 kW, the single-line diagram, relay list, trip scheme and settings of the Generating Facility, and three-line diagram shall be approved by a Professional Electrical Engineer registered in the State of Hawaii prior to being submitted to the Company. Such approval shall be indicated by the engineer's professional seal on all drawings and documents.

2. Verification Testing.

a. Upon initial parallel operation of the Generating Facility, or any time interface hardware or software is changed, a verification test shall be performed. A licensed professional engineer or otherwise qualified individual shall perform verification testing in accordance with the manufacturer's published test procedure. Qualified individuals include

professional engineers, factory trained and certified technicians, and licensed electricians with experience in testing protective equipment. The Company reserves the right to witness verification testing or require written certification that the testing was performed.

b. Verification testing shall also be performed every four years. The Company reserves the right to perform, at its expense, additional verification testing. All verification tests prescribed by the manufacturer shall be performed. If wires must be removed to perform certain tests, each wire and each terminal shall be clearly and permanently marked. The Customer-Generator shall maintain verification test reports for inspection by the Company.

c. Inverters shall be verified once per year as follows: once per year the Customer-Generator shall operate the customer generator system disconnect switch and verify the Generating Facility automatically shuts down and does not reconnect with the Company's system until the Company's system continuous normal voltage and frequency have been maintained for a minimum of 5 minutes. The Customer-Generator shall maintain a log of these operations for inspection by the Company.

d. Any system that depends upon a battery for trip power shall be checked once per month for proper voltage. Once every four (4) years the battery shall either be replaced or have a discharge test performed. The Customer-Generator shall maintain a log of these operations for inspection by the Company.

e. Tests and battery replacements as specified in this section 2 of Exhibit B shall be at the Customer-Generator's expense.

3. <u>Inspection of the Generating Facility</u>.

a. The Company may, in its discretion and upon reasonable notice not to be less than 24 hours (unless otherwise agreed to by the Company and the Customer-Generator), observe the construction of the Generating Facility (including but not limited to relay settings and trip schemes) and the equipment to be installed therein.

b. Within fourteen days after receiving a written request from the Customer-Generator to begin producing electric energy in parallel with the Company's system, the Company may inspect the Generating Facility (including but not limited to relay settings and trip schemes) and observe the performance of the verification testing. The Company may accept or reject the request to begin producing electric energy based upon the inspection or verification test results.

c. If the Company does not perform an inspection of the Generating Facility (including but not limited to relay settings and trip schemes) and observe the performance of verification testing within the fourteen-day period, the Customer-Generator may begin to produce energy after certifying to the Company that the Generating Facility has been tested in accordance with the verification testing requirements and has successfully completed such tests. After receiving the certification, the Company may conduct an

inspection of the Generating Facility (including but not limited to relay settings and trip schemes) and make reasonable inquiries of the Customer-Generator, but only for purposes of determining whether the verification tests were properly performed. The Customer-Generator shall not be required to perform the verification tests a second time, unless irregularities appear in the verification test report or there are other objective indications that the tests were not properly performed in the first instance.

d. The Company may, in its discretion and upon reasonable notice not to be less than 24 hours (unless an apparent safety or emergency situation exists which requires immediate inspection to resolve a known or suspected problem), inspect the Generating Facility (including but not limited to relay settings and trip schemes) and its operations (including but not limited to the operation of control, synchronizing, and protection schemes) after the Generating Facility commences operations.

4. <u>Operating Records and Procedures</u>.

a. The Company may require periodic reviews of the maintenance records, and available operating procedures and policies of the Generating Facility.

b. The Customer-Generator must separate the Generating Facility from the Company's system whenever requested to do so by the Company's System Operator pursuant to this Agreement. It is understood and agreed that at times it may not be possible for the Company to accept electric energy due to temporary operating conditions on the Company's system, and these periods shall be specified by the Company's System Operator. Notice shall be given in advance when these are scheduled operating conditions.

c. Logs shall be kept by the Customer-Generator for information on unit availability including reasons for planned and forced outages; circuit breaker trip operations, relay operations, including target initiation and other unusual events. The Company shall have the right to review these logs, especially in analyzing system disturbance.

5. <u>Changes to the Generating Facility, Operating Records, and Operating Procedures</u>.

a. The Customer-Generator agrees that no material changes or additions to the Generating Facility as reflected in the single-line diagram, relay list, trip scheme and settings of the Generating Facility, Generating Facility Equipment List, and three-line diagram (if the Generating Facility’s capacity is greater than or equal to 30 kW), shall be made without having obtained prior written consent from the Company, which consent shall not be unreasonably withheld.

b. As a result of the observations and inspections of the Generating Facility (including but not limited to relay list, trip scheme and settings) and the performance of the verification tests, if any changes in or additions to the Generating Facility, operating records, and operating procedures and policies are required by the Company, the Company shall specify such changes or additions to the Customer-Generator in writing, and the

Customer-Generator shall, as soon as practicable, but in no event later than thirty (30) days after receipt of such changes or additions, respond in writing, either noting agreement and action to be taken or reasons for disagreement. If the Customer-Generator disagrees with the Company, it shall note alternatives it will take to accomplish the same intent, or provide the Company with a reasonable explanation as to why no action is required by good engineering practice.

6. <u>Generating Facility Equipment List</u>.

The Generating Facility shall include the following equipment:

[Specific items to be attached as necessary. The Generating Facility Equipment List, together with the single-line diagram, relay list and trip scheme, and three-line diagram (if the Generating Facility's capacity is greater than or equal to 30 kW), should be attached to this Exhibit B.]

EXHIBIT C

COMPANY-OWNED INTERCONNECTION FACILITIES

(To be filled out by Company)

1. Description of Company Interconnection Facilities

The Company will purchase, construct, own, operate and maintain all interconnection facilities required to interconnect the Company's system with the Generating Facility at ___ volts, up to the point of interconnection.

The Company Interconnection Facilities, for which the Customer-Generator agrees to pay, include:

[Need to specify the interconnection facilities. If no interconnection facilities, state "None".]

2. Customer-Generator Payment to Company for Company Interconnection Facilities, Review of Generating Facility, and Review of Verification Testing

The Customer-Generator shall pay to the Company the total estimated interconnection cost to be incurred by the Company (Total Estimated Interconnection Cost), which is comprised of (i) the estimated cost of the Company Interconnection Facilities, (ii) the estimated engineering costs associated with a) developing the Company Interconnection Facilities and b) reviewing and specifying those portions of the Generating Facility which allow interconnected operation, and iii) witnessing and reviewing the verification testing. The following summarizes the Total Estimated Interconnection Cost:

Description	**Estimated Cost ($)** [If no cost, state "None".]
Total Estimated Interconnection Cost ($):	

The Total Estimated Interconnection Cost, which, except as otherwise provided herein, is non-refundable, shall be paid by the Customer-Generator fourteen (14) days after receipt of an invoice from the Company, which shall be provided not less than thirty (30) days prior to start of procurement of the Company Interconnection Facilities.

Within thirty (30) days of receipt of an invoice, which shall be provided within fourteen (14) days of the final accounting, which shall take place within sixty (60) days of completion of construction of the Company Interconnection Facilities, the Customer-Generator shall remit to the Company the difference between the Total Estimated Interconnection Cost paid to date and the total actual interconnection cost (Total Actual Interconnection Cost). The latter is comprised of (i) the total costs of the Company Interconnection Facilities, and (ii) the total engineering costs associated with a) developing the Company Interconnection Facilities and b) reviewing and

specifying those portions of the Generating Facility which allow interconnected operations as such are described in Exhibit A, and iii) reviewing the verification testing. If in fact the Total Actual Interconnection Cost is less than the payments received by the Company as the Total Estimated Interconnection Cost, the Company shall repay the difference to the Customer-Generator within thirty (30) days of the final accounting.

If the Agreement is terminated prior to the Customer-Generator's payment for the Total Actual Interconnection Cost (or the portion of this cost which has been incurred) or prior to the Company's repayment of the over collected amount of the Total Estimated Interconnection Cost (or the portion of this cost which has been paid), such payments shall be made by the Customer-Generator or Company, as appropriate. If payment is due to the Company, the Customer-Generator shall pay within thirty (30) days of receipt of an invoice, which shall be provided within fourteen (14) days of the final accounting, which shall take place within sixty (60) days of the date the Agreement is terminated. If payment is due to the Customer-Generator, the Company shall pay within thirty (30) days of the final accounting.

All Company Interconnection Facilities shall be the property of the Company.

3. <u>Operation, Maintenance and Testing Costs</u>

The Company will bill the Customer-Generator monthly and the Customer-Generator will, within 30 days after the billing date, reimburse the Company for any costs incurred in operating, maintaining or testing the Company Interconnection Facilities. The Company's costs will be determined on the basis of outside service costs, direct labor costs, material costs, transportation costs, applicable overheads at time incurred and applicable taxes. Applicable overheads will include such costs as vacation, payroll taxes, non-productive wages, supervision, tools expense, employee benefits, engineering administration, corporate administration, and materials handling. Applicable taxes will include the Public Service Company Tax, and Public Utility Fee.

Rule No. 24

CUSTOMER GRID SUPPLY PLUS

A. AVAILABILITY FOR CUSTOMER-GENERATORS

Customer Grid-Supply Plus service is available to Eligible Customer-Generators who own or lease from a third party and operate or contract to operate with a third party a solar, wind turbine, biomass, or hydroelectric energy generating facility, or a hybrid system consisting of two or more of these facilities ("Generating Facility"), with a capacity of not more than one hundred kilowatts (100 kW) and where:

1. The Generating Facility which may include an energy storage system, is located on the Eligible Customer-Generator's premises,

2. The Generating Facility will be operated in parallel with the Company's transmission and distribution facilities,

3. The Generating Facility is in conformance with the Company's interconnection requirements provided in Rule No. 14, Paragraph H, the requirements of this tariff and the Grid Supply Plus Interconnection Agreement, and

4. The Generating Facility is sized and designed such that all of the Generating Facility's output is intended to offset all or part of the Eligible Customer-Generator's own electrical requirements ("Host Load").

B. GRID SUPPLY INTERCONNECTION AGREEMENT

1. Eligible Customer-Generator shall complete and sign an application for service and a standard Grid-Supply Plus Interconnection Agreement (100 kW or less) provided as Appendix I of this Rule ("Interconnection Agreement"), to receive service under this tariff. Where the Eligible Customer-Generator is not the person or entity in whose name electric service is rendered for the Eligible Customer-Generator's premises where the Generating Facility is located, i.e. where a landlord-tenant relationship exists, only the Eligible Customer-Generator shall be required to complete and sign the application for service and the Interconnection Agreement.

2. The Eligible Customer-Generator's Generating Facility and interconnection systems must be in compliance with all applicable safety and performance standards of the National Electric Code (NEC), the Institute of Electrical and Electronic Engineers (IEEE), accredited testing laboratories such as Underwriters Laboratories (UL), the Company's interconnection requirements provided in Rule No. 14. Section H, and is subject to any other requirements provided in the Interconnection Agreement.

C. METERING AND BILLING

1. The Company, at its expense, may install meter(s) to record the flow of electric power in each direction. The Eligible Customer-Generator shall, at its expense, provide, install and maintain all conductors, service switches, fuses, meter sockets, meter instrument transformer housing and mountings, switchboard meter test buses, meter panels, and similar devices required for service connection and meter installation and operation on the customer's premises in accordance with the Company's Rule No. 14, Section A.2.

SHEET NO. 49.1-C
Effective February 20, 2018

Rule No. 24

CUSTOMER GRID SUPPLY PLUS – Continued

2. Eligible Customer-Generators served under this tariff who also receive energy from the Company shall be billed monthly for the energy supplied by the Company, in accordance with the Company's Rule No. 8, the applicable rate schedule, and the Company's rules filed with the Commission.

3. All rates, terms, and conditions from the applicable rate schedule will apply except for the minimum charge. The minimum charge shall be as follows:

Applicable Rate Schedule:

Schedule R, TOU-RI, TOU-R, TOU EV	$25.00 per month
Schedule G, TOU-G,	$50.00 per month
Schedule J, TOU-J, SS	Per Rate Schedule
Schedule P, TOU-P	Per Rate Schedule
Schedule F	Per Rate Schedule
Schedule EV-F	Per Rate Schedule

4. The measurement of the kWh supplied by the Company to the Customer-Generator and the kWh received by the Company from the Customer-Generator shall begin on the date of installation of the required meter(s) or Company's approval to interconnect the Generating Facility, whichever comes later. For each billing period, the kWh received by the Company shall be assigned to kWh credits applied to calculate the current bill ("Credits Applied") and/or to kWh credits carried over to the future billing period(s) within the current 12-month period ("Banked Credits"). The Company shall assign to kWh Credits Applied the amount of kWh received up to the amount of the kWh supplied by the Company. Any kWh received by the Company in excess of the kWh supplied by the Company shall be added to kWh Banked Credits. The balance of kWh Banked Credits shall be reduced by any kWh Banked Credits Applied, which are described below.

SHEET NO. 49.1-D
Effective February 20, 2018

Rule No. 24

CUSTOMER GRID SUPPLY PLUS – Continued

5. The applicable Energy Credit Rates for each rate schedule shall be as follows:

Energy Credit Rates for Each Applicable Rate Schedule:

Schedule	MAUI	LANAI	MOLOKAI	
R, TOU-RI, TOU-R, TOU EV	12.17	20.80	16.77	cents per kWh daily
G, TOU-G	12.17	20.80	16.77	cents per kWh daily
J, TOU-J, SS, EV-F	12.17	20.80	16.77	cents per kWh daily
P, TOU-P	12.17	20.80	16.77	cents per kWh daily
F	12.17	20.80	16.77	cents per kWh daily

Energy Credit Rates shall be fixed at the above levels through October 20, 2022. Thereafter, the applicable Energy Credit Rates shall be subject to modification by the Commission.

6. The Energy Credits for the billing period shall be calculated as the applicable Energy Credit Rate multiplied by the sum of kWh Credits Applied plus kWh Banked Credits Applied. Such Energy Credits shall appear as a separate line item on the customer bill. When the kWh supplied by the Company exceeds the kWh received by the Company, kWh Banked Credits Applied is the amount of the kWh Banked Credits that is included in the calculation of Energy Credits to reduce the Customer-Generator's electric bill calculated under the applicable rate schedule for the energy delivered by the Company to the Customer-Generator in the billing period. Application of Energy Credits may only reduce the electric bill to an amount equal to the minimum charge for the applicable rate schedule, plus any surcharges that are applicable in addition to the minimum charge.

7. A reconciliation will be made every 12 months for the customer's energy supplied by the Company with the energy received by the Company from the Eligible Customer-Generator's generating facility. This reconciliation will be performed as follows:

The kilowatthours supplied by the Company and the kilowatthours produced by the Eligible Customer-Generator shall be recorded for 12 billing periods. Coincident with the twelfth bill following the start of the grid supply plus contract and each 12-month period thereafter, the Eligible kWh shall be determined as the lesser of the kWh supplied to the Eligible Customer-Generator or the kWh received from the Eligible Customer-Generator over the 12-month period. Credited kWh shall be defined as the sum of kWh Credits Applied plus kWh Banked Credits Applied over the 12-month period. A Reconciliation Bill Credit shall be applied if the Eligible kWh is greater than the Credited kWh, and shall be calculated as the Energy Credit Rate multiplied by the difference between the Eligible kWh and the Credited kWh. If the Credited kWh is greater than or equal to the Eligible kWh, then there is no Reconciliation Bill Credit. At the time of the reconciliation, the balance of the kWh Banked Credits is set to zero for the next 12 month period.

If an Eligible Customer-Generator terminates its Customer Grid Supply Plus service under this tariff prior to the end of any 12-month period, the Company shall reconcile the customer's energy supplied by the Company with the energy produced by the Eligible Customer-Generator generating facility in the same manner as the reconciliation that would have been performed at the end of the normal 12-month period.

The kilowatthours supplied by the Company and the kilowatthours received from the Eligible Customer-Generator, including an accounting of the kWh Credits Applied, kWh Banked Credits, and kWh Banked Credits Applied in each billing period of the current 12-month period will be included in the customer's regular billing statement.

D. COMMUNICATIONS AND CONTROLLABILITY

Subject to the Communications and Controls requirements set forth in this Paragraph D, ~~T~~the Customer-Generator may elect to either: (1) have the Company install a separate smart production meter to be owned, installed or operated by the Company in which case the Company shall be responsible for the cost of metering and control of the Customer-Generator's Generating Facility (the "Smart Meter Option"); or (2) contract separately with a third-party aggregator, where the Company will accept aggregated data from such aggregators that can meet the Company's technical requirements for reliability of data collection and provision to the Company consistent with Section 8.f of Appendix I to this Rule No. 24 (the "Aggregator Option"). A Customer-Generator who elects the Aggregator Option shall be responsible for the costs of contracting with the third-party aggregator.

Whether the Smart Meter Option or the Aggregator Option is elected by the Customer-Generator, the Company shall be able to remotely measure, monitor, evaluate and verify technical compliance, Generating Facility performance, and power quality and, if necessary, control the Generating Facility ("Communication and Controls"). The Communication and Controls shall include monitoring of: (a) gross generation by the generating facility; (b) feedback of Watts, Vars, WattHours, current and voltage; and (c) if available, connection status of the Generating Facility, frequency, and operational state of charge (i.e., 0% to 100% of operational energy storage capacity). The acceptable method(s) of implementing and satisfying the Communication and Controls requirements may include cellular or other comparable technology.

Customer-Generators with single-phase Generating Facilities with a system size rating less than or equal to 175 Amps opting for the Smart Meter Option to satisfy the Communication and Controls requirement will be required to install a meter socket with line terminals wired to an acceptable location on the load side of the production meter or customer generator disconnect switch and load terminals wired to the power output terminals of the generator.

Customer-Generators with single-phase Generating Facilities with a system size rating greater than 175 Amps or three-phase Generating Facilities of any size opting for the Smart Meter Option to satisfy the Communication and Controls requirement will be required to install a meter socket compatible with a form 2s meter. The line terminals of the meter socket shall be wired to an acceptable location on the load side of the utility revenue meter and the load terminals shall be wired to the control voltage terminal of a definite purpose contactor. The definite purpose contactor shall have normally open contacts rated appropriately for the Generating Facility design and installed with terminals connected to the power output terminals of the generator and the Customer Generator System Disconnect switch.

With respect to the Smart Meter Option, the LTE cellular connectivity and throughput speed will be measured pre-deployment by utilizing built in software toolkits with Verizon LTE mobiledevices. LTE connectivity will be deemed acceptable using either a bandwidth test or a signal strength test. The bandwidth test does not indicate the minimum throughput required for the operation of the Smart Meter Option and is only used to determine acceptable connectivity. The minimum acceptable bandwidth requirement for connectivity testing shall be 1.0 Mbps download and 0.5 Mbps upload. Should the site fail the bandwidth test, a signal strength test will be performed and shall be deemed acceptable with minimum readings of -110 dBm RSRP and an RSRQ of -12 dB or better. Lower signal strength values are considered marginal and may result in lower performance which can be verified by testing the meter on-site. For example, -120 dBm is a lower signal strength measurement than -110 dBm. As necessary, utility personnel will determine and record official cellular connectivity tests prior to the installation and operation of the smart production meter at production meter socket location indicated on the site plan included with the application. Furthermore, once the meter installation is completed, utility personnel will verify the meter is successfully communicating with the Verizon Grid Wide platform.

Rule No. 24

CUSTOMER GRID SUPPLY PLUS – Continued

Customer-Generators whose geographic location, or other variable, prevents the Customer-Generator from meeting the foregoing minimum cellular connectivity requirements ("Outlying Customer-Generators") shall not be precluded from participating in the Customer Grid Supply Plus Program. In such case, the Company shall utilize non-cellular alternatives to establish the connectivity levels sufficient to implement and satisfy the Communications and Controls requirements, to the extent such alternatives are available and acceptable, as determined by the Company ("Non-Cellular Alternatives").

If the Company's remote control of an Outlying Customer-Generator's Generating Facility cannot be established through Non-Cellular Alternatives, the Outlying Customer-Generator shall install at the Outlying Customer-Generator's premises a second meter socket, to allow for a seamless transition at such time when the technology becomes available, or is otherwise appropriate for installation at the Outlying Customer-Generator's premises, to allow the Company to remotely control such Outlying Customer-Generator's Generating Facility.

Rule No. 24

CUSTOMER GRID SUPPLY PLUS – Continued

E. INTERCONNECTION PROCESS

1. Eligible Customer-Generator requests to interconnect and operate a Generating Facility in parallel with the Company's electric system will be processed in accordance with the procedures in the Interconnection Process Overview provided in Appendix III of Rule 14, Paragraph H.

2. Under no circumstances shall a Customer-Generator interconnect and operate a Generating Facility in parallel with the Company's electric system without prior written approval by the Company in the form of a fully executed Interconnection Agreement.

F. APPLICATION CHARGE

Each Eligible Customer submitting an application for service under this tariff shall pay a one-time application charge of $50.00 unless such application is submitted electronically via the Company's online Customer Interconnection Tool, in which case no application charge will be assessed.

G. MICROGRIDS

1. Capitalized terms used in this section are as defined in Rule No. XX, Microgrid Services Tariff.

2. During Grid-Connected Mode, the Microgrid will be operated in parallel with the Company's System.

3. A Customer may operate its Generating Facility as part of a Customer Microgrid or be a participant in a Hybrid Microgrid.

4. A Customer who intends to operate its Generating Facility within a Customer Microgrid, or as a participant in a Hybrid Microgrid, shall notify the Company in its application through the Customer Interconnection Tool.

SHEET NO. 49.1-J
Effective Month Day, Year

Rule No. 24

CUSTOMER GRID SUPPLY PLUS – Continued

5. A Customer who operates its Generating Facility as part of a Microgrid after obtaining interconnection approval from the Company shall update its application through the Customer Interconnection Tool. Such notification and revision shall satisfy the Customer's notice requirements set forth in Tariff Rule 3B (Change in Customer's Equipment or Operations).

6. Customer Microgrids and Hybrid Microgrid Participants shall comply with the requirements of Rule No.XX, Microgrid Services Tariff, including Section H, Microgrid Operation.

SHEET NO. 49.3-A
Effective February 20, 2018
Proposed Changes: January 17, 2021

Rule No. 25

SMART EXPORT PROGRAM

A. AVAILABILITY FOR CUSTOMER-GENERATORS

The Smart Export Program is available to Eligible Customer-Generators who own or lease from a third party and operate or contract to operate with a third party a solar, wind turbine, biomass, or hydroelectric energy generating facility, or a hybrid system consisting of two or more of these facilities ("Generating Facility"), with a capacity of not more than one hundred kilowatts (100 kW) and where:

1. The Generating Facility which may include an energy storage system, is located on the Eligible Customer-Generator's premises,

2. The Generating Facility will be operated in parallel with the Company's transmission and distribution facilities,

3. The Generating Facility is in conformance with the Company's interconnection requirements provided in Rule No. 14, Paragraph H, the requirements of this tariff and the Smart Export Program Interconnection Agreement, and

4. The Generating Facility is sized and designed such that all of the Generating Facility's output is intended to offset all or part of the Eligible Customer-Generator's own electrical requirements ("Host Load").

B. SMART EXPORT INTERCONNECTION AGREEMENT

1. Eligible Customer-Generator shall complete and sign an application for service and a standard Smart Export Interconnection Agreement (100 kW or less) provided as Appendix I of this Rule ("Interconnection Agreement"), to receive service under this tariff. Where the Eligible Customer-Generator is not the person or entity in whose name electric service is rendered for the Eligible Customer-Generator's premises where the Generating Facility is located, i.e. where a landlord-tenant relationship exists, only the Eligible Customer-Generator shall be required to complete and sign the application for service and the Interconnection Agreement.

2. The Eligible Customer-Generator's Generating Facility and interconnection systems must be in compliance with all applicable safety and performance standards of the National Electric Code (NEC), the Institute of Electrical and Electronic Engineers (IEEE), accredited testing laboratories such as Underwriters Laboratories (UL), the Company's interconnection requirements provided in Rule No. 14. Section H, and is subject to any other requirements provided in the Interconnection Agreement.

Rule No. 25

SMART EXPORT PROGRAM - Continued

C. METERING AND BILLING

1. The Company, at its expense, may install meter(s) to record the flow of electric power in each direction. The Eligible Customer-Generator shall, at its expense, provide, install and maintain all conductors, service switches, fuses, meter sockets, meter instrument transformer housing and mountings, switchboard meter test buses, meter panels and similar devices required for service connection and meter installation and operation on the customer's premises in accordance with the Company's Rule No. 14, Section A.2.

2. Eligible Customer-Generators served under this tariff who also receive energy from the Company shall be billed monthly for the energy supplied by the Company, in accordance with the Company's Rule No. 8, the applicable rate schedule, and the Company's rules filed with the Commission.

3. All rates, terms, and conditions from the applicable rate schedule will apply except for the minimum charge. The minimum charge shall be as follows:

Applicable Rate Schedule:

Schedule R, TOU-RI, TOU-R, TOU EV	$25.00 per month
Schedule G, TOU-G,	$50.00 per month
Schedule J, TOU-J, SS	Per Rate Schedule
Schedule P, TOU-P	Per Rate Schedule
Schedule F	Per Rate Schedule
Schedule EV-F	Per Rate Schedule

SHEET NO. 49.3-C
Effective February 20, 2018

Rule No. 25

SMART EXPORT PROGRAM - Continued

4. The measurement of the kWh supplied by the Company to the Customer-Generator and the kWh received by the Company from the Customer-Generator shall begin on the date of installation of the required meter(s) or Company's approval to interconnect the Generating Facility, whichever comes later. For each billing period, the kWh received by the Company within the 4:00 p.m. to 12:00 a.m. and the 12:00 a.m. to 9:00 a.m. export windows shall be assigned to kWh credits applied to calculate the current bill ("Credits Applied") and/or to kWh credits carried over to the future billing period(s) within the current 12-month period (" Banked Credits"). The Company shall assign to kWh Credits Applied the amount of kWh received up to the amount of the kWh supplied by the Company. Any kWh received by the Company in excess of the kWh supplied by the Company shall be added to kWh Banked Credits. The balance of kWh Banked Credits shall be reduced by any kWh Banked Credits Applied, which are described below. Customers shall not be assigned any credits for the kWh received by the Company within the 9:00 a.m. to 4:00 p.m. non-export window.

5. The applicable Energy Credit Rates for each rate schedule shall be as follows:

Energy Credit Rates for Each Applicable Rate Schedule from 12:00 a.m. to 9:00 a.m.:

Schedule	MAUI	LANAI	MOLOKAI	
R, TOU-RI, TOU-R, TOU EV	14.41	20.79	16.64	cents per kWh daily
G, TOU-G	14.41	20.79	16.64	cents per kWh daily
J, TOU-J, SS, EV-F	14.41	20.79	16.64	cents per kWh daily
P, TOU-P	14.41	20.79	16.64	cents per kWh daily
F	14.41	20.79	16.64	cents per kWh daily

SHEET NO. 49.3-D
Effective February 20, 2018

Rule No. 25

SMART EXPORT PROGRAM - Continued

Energy Credit Rates for Each Applicable Rate Schedule from 9:00 a.m. to 4:00 p.m.:

Schedule	MAUI	LANAI	MOLOKAI	
R, TOU-RI, TOU-R, TOU EV	0.00	0.00	0.00	cents per kWh daily
G, TOU-G	0.00	0.00	0.00	cents per kWh daily
J, TOU-J, SS, EV-F	0.00	0.00	0.00	cents per kWh daily
P, TOU-P	0.00	0.00	0.00	cents per kWh daily
F	0.00	0.00	0.00	cents per kWh daily

Energy Credit Rates for Each Applicable Rate Schedule from 4:00 p.m. to 12:00 a.m.:

Schedule	MAUI	LANAI	MOLOKAI	
R, TOU-RI, TOU-R, TOU EV	14.41	20.79	16.64	cents per kWh daily
G, TOU-G	14.41	20.79	16.64	cents per kWh daily
J, TOU-J, SS, EV-F	14.41	20.79	16.64	cents per kWh daily
P, TOU-P	14.41	20.79	16.64	cents per kWh daily
F	14.41	20.79	16.64	cents per kWh daily

Energy Credit Rates shall be fixed at the above levels through October 20, 2022. Thereafter, the applicable Energy Credit Rates shall be subject to modification by the Commission.

Rule No. 25

SMART EXPORT PROGRAM - Continued

6. The Energy Credits for the billing period shall be calculated as the applicable Energy Credit Rate multiplied by the sum of kWh Credits Applied plus kWh Banked Credits Applied. Such Energy Credits shall appear as a separate line item on the customer bill.

   When the kWh supplied by the Company exceeds the kWh received by the Company, kWh Banked Credits Applied is the amount of the kWh Banked Credits that is included in the calculation of Energy Credits to reduce the Customer-Generator's electric bill calculated under the applicable rate schedule for the energy delivered by the Company to the Customer-Generator in the billing period. Application of Energy Credits may only reduce the electric bill to an amount equal to the minimum charge for the applicable rate schedule, plus any surcharges that are applicable in addition to the minimum charge.

7. A reconciliation will be made every 12 months for the customer's energy supplied by the Company with the energy received by the Company from the Eligible Customer-Generator's generating facility. This reconciliation will be performed as follows:

   The kilowatthours supplied by the Company and the kilowatthours produced by the Eligible Customer-Generator shall be recorded for 12 billing periods. Coincident with the twelfth bill following the start of the smart export contract and each 12-month period thereafter, the Eligible kWh shall be determined as the lesser of the kWh supplied to the Eligible Customer-Generator or the kWh received from the Eligible Customer-Generator over the 12-month period. Credited kWh shall be defined as the sum of kWh Credits Applicd plus kWh Banked Credits Applied over the 12-month period. A Reconciliation Bill Credit shall be applied if the Eligible kWh is greater than the Credited kWh, and shall be calculated as the Energy Credit Rate multiplied by the difference between the Eligible kWh and the Credited kWh. If the Credited kWh is greater than or equal to the Eligible kWh, then there is no Reconciliation Bill Credit. At the time of the reconciliation, the balance of the kWh Banked Credits is set to zero for the next 12 month period.

If an Eligible Customer-Generator terminates its Smart Export service under this tariff prior to the end of any 12-month period, the Company shall reconcile the customer's energy supplied by the Company with the energy produced by the Eligible Customer-Generator generating facility in the same manner as the reconciliation that would have been performed at the end of the normal 12-month period.

The kilowatthours supplied by the Company and the kilowatthours received from the Eligible Customer-Generator, including an accounting of the kWh Credits Applied, kWh Banked Credits, and kWh Banked Credits Applied in each billing period of the current 12-month period will be included in the customer's regular billing statement.

D. INTERCONNECTION PROCESS

1. Eligible Customer-Generator requests to interconnect and operate a Generating Facility in parallel with the Company's electric system will be processed in accordance with the procedures in the Interconnection Process Overview provided in Appendix III of Rule 14, Paragraph H.

2. Under no circumstances shall a Customer-Generator interconnect and operate a Generating Facility in parallel with the Company's electric system without prior written approval by the Company in the form of a fully executed Interconnection Agreement.

Superseding SHEET NO. 49.3-G
Effective ~~February~~ April ~~2~~30, 2018

REVISED SHEET NO. 49.3-G
___Effective ~~April 30, 2018~~Month Day, Year

Rule No. 25

SMART EXPORT PROGRAM - Continued

E. APPLICATION CHARGE

Each Eligible Customer submitting an application for service under this tariff shall pay a one-time application charge of $50.00 unless such application is submitted electronically via the Company's online Customer Interconnection Tool, in which case no application charge will be assessed.

F. MICROGRIDS

1. Capitalized terms used in this section are as defined in Rule No. XX, Microgrid Services Tariff.

2. During Grid-Connected Mode, the Microgrid will be operated in parallel with the Company's System.

3. A Customer may operate its Generating Facility as part of a Customer Microgrid or be a participant in a Hybrid Microgrid.

4. A Customer who intends to operate its Generating Facility within a Customer Microgrid, or as a participant in a Hybrid Microgrid, shall notify the Company in its application through the Customer Interconnection Tool.

5. A Customer who operates its Generating Facility as part of a Microgrid after obtaining interconnection approval from the Company shall update its application through the Customer Interconnection Tool. Such notification and revision shall satisfy the Customer's notice requirements set forth in Tariff Rule 3B (Change in Customer's Equipment or Operations).

6. Customer Microgrids and Hybrid Microgrid Participants shall comply with the requirements of Rule No.XX, Microgrid Services Tariff, including Section H, Microgrid Operation.

Sheet No. 49.5-A
Effective July 11, 2018
Proposed Changes: January 17, 2021

Rule No. 26
COMMUNITY-BASED RENEWABLE ENERGY PROGRAM
PHASE 1

A. AVAILABILITY

Phase 1 ("Phase 1") of the Company's Community-Based Renewable Energy ("CBRE") program ("Program") is available to residential and commercial customers of the Company ("Customers") where:

1. Customer has a current electricity account with the Company and has received service at the same location for which they are requesting participation for at least 6 months at the time of enrollment and has not received any disconnection notifications at that same location within the last 12 months;

2. Customer is not currently enrolled or participating in Schedule Q, Net Energy Metering, Feed-in Tariff, Standard Interconnection Agreement, Customer Grid Supply, Customer Grid Supply Plus, Smart Export, or Customer Self Supply ("CSS") tariff program, or similar customer program; and

3. Customer is not currently participating in another CBRE Phase 1 Facility.

B. CUSTOMER PARTICIPATION

Customers who subscribe to a CBRE Phase 1 Facility ("Facility") are defined as "Subscribers."

1. Customers shall be allowed to purchase or lease an interest in the energy output of any eligible CBRE Phase 1 Facility on the same island as their service address that is allocated CBRE Phase 1 Program capacity to offset their energy consumption.

2. Subscribers shall be required to enter into an appropriate CBRE Subscriber Agreement ("Agreement") with a CBRE subscriber organization ("Subscriber Organization"). The Agreement shall contain standard information and provisions that ensure transparency and proper consumer protection. The Agreement shall include or be supplemented by, at minimum, the following elements:

Order No. 35560; Filed June 29, 2018,
Transmittal Letter dated July 10, 2018.

Rule No. 26 - Continued
COMMUNITY-BASED RENEWABLE ENERGY PROGRAM
PHASE 1

a. CBRE Phase 1 Facility and Subscriber Organization information

   i. CBRE Phase 1 Facility name and address;
   ii. CBRE Subscriber Organization and/or Owner name, address, website URL, phone number, and email address;
   iii. Subscriber name, address, phone number, and email address; and
   iv. Subscriber's Utility name and account number;

b. Financial Information:

   i. Credit rate ("Credit Rate") and calculation;
   ii. Bill credit mechanism and timing;
   iii. Tax and securities implications;
   iv. Use of escrow account to hold any pre-development enrollment fees or deposits, which shall be released to Subscriber Organization upon commercial operation of the Facility; and
   v. Transfer and/or exit fees and terms;

c. The Subscriber Agency Agreement and Consent Form attached hereto as Appendix I, which each Subscriber Organization shall complete with each Subscriber acquiring an interest in such Subscriber Organization's CBRE Facility, permitting the sharing of: .

   i. Subscriber's Account and Energy Usage Data;
   ii. Subscription Information;
   iii. Aggregated CBRE Project data and anonymized Subscriber data; and
   iv. Subscriber data in response to information requests from the PUC or the Division of Consumer Advocacy ("CA").

d. The standard form Disclosure Checklist is attached hereto as Appendix II, which each Subscriber Organization shall complete with each Subscriber acquiring an interest in such Subscriber Organization's CBRE Facility.

Order No. 35560; Filed June 29, 2018,
Transmittal Letter dated July 10, 2018.

Rule No. 26 - Continued
COMMUNITY-BASED RENEWABLE ENERGY PROGRAM
PHASE 1

3. Subscribers shall obtain approval of eligibility, confirm maximum buy-in level and apply to enroll into the CBRE Program through the Company (the Company, in its role as administrator of the CBRE Program, is sometimes referred to herein as the "Administrator"). Company shall facilitate completion of these tasks, but final approval and enrollment of the Subscriber into a Subscriber's Organization's CBRE Phase 1 Facility shall rest with such Subscriber Organization.

4. Subscriber's effective kilowatt ("kW") alternating current ("AC") interest in the CBRE Phase 1 Facility shall be calculated based on the Subscriber's portion of the renewable energy output of the CBRE Phase 1 Facility multiplied by the total capacity of the CBRE Phase 1 Facility in kW AC.

5. Subscribers shall be required to purchase a minimum of 1 kW AC, except in the case of confirmed low to moderate income ("LMI") Subscribers for which this requirement shall be 0.5 kW AC.

6. Subscribers shall be permitted to purchase a CBRE Program interest equivalent to an expected production of no more than 100 percent of their historic energy consumption for the previous 12 months.

    a. Company shall use the 12 months immediately prior to the first billing cycle upon which a Subscriber is eligible to receive a credit for the CBRE Subscription to determine the Subscriber's previous 12 months of energy consumption.
    b. If Subscriber does not have a 12 month billing history as of that first billing cycle, and there is not 12 months of billing history, including billing history of another customer associated with the Subscriber's premises, the Company shall use the available monthly average consumption multiplied over 12 months in order to generate a proxy average annual consumption.

Order No. 35560; Filed June 29, 2018,
Transmittal Letter dated July 10, 2018.

Rule No. 26 - Continued
COMMUNITY-BASED RENEWABLE ENERGY PROGRAM
PHASE 1

7. In Phase 1, 40 percent of the total output of each project's total CBRE capacity shall be reserved for individual subscriptions up to 50 kW.

8. An eligible Customer shall be allowed to acquire and hold an interest in only one (1) CBRE Phase 1 Facility at any given time.

9. Subscriber shall maintain, for the duration of their participation in the CBRE Program, an electricity account and service address on the same island as the CBRE Phase 1 Facility in which they are participating.

10. Subscriber may change the premises to which the CBRE Phase 1 Facility electricity generation shall be attributed, as long it is on the same island and meets the eligibility requirements set forth herein. No transfer fee shall be applied.

11. If Subscriber requests to transfer their interest to another Customer, the Subscriber Organization shall confirm that Customer's eligibility as set forth herein. Any payment for the transfer shall be in accordance with the preset repurchase/resale price schedule outlined in the Agreement.

    a. There shall be no transfer charge/fee if the meter associated with the account remains unchanged.
    b. A transfer shall be at least 50% of the selling Subscriber's interest.
    c. Any transfer will not be effective until the Subscriber Organization notifies the Administrator of the transfer. For any notice of transfer on or prior to the twentieth (20th) day of any month, such transfer will be effective as of the first (1st) day of that month. For any notice of transfer after the twentieth (20th) day of a month, the transfer will be effective as of the first (1st) day of the next month.

Order No. 35560; Filed June 29, 2018,
Transmittal Letter dated July 10, 2018.

Rule No. 26 - Continued
COMMUNITY-BASED RENEWABLE ENERGY PROGRAM
PHASE 1

12. If Subscriber requests to sell all or any portion of their Subscription back to the Subscriber Organization, Subscriber Organization shall buy back the interest in accordance with the preset repurchase/resale price schedule outlined in the Agreement.

    a. Subscriber Organization shall complete the buy-back of the Subscriber's interest within thirty (30) days of the Subscriber's request.
    b. Upon completion of a subscription buy-back, the Subscriber Organization shall notify the Company within two business days of completion of the transaction. The Company shall confirm such buy-back in the Subscriber database and cease CBRE participation credits effective as communicated by the Subscriber Organization on the first day of the month of notification if such notice is given on or prior to the twentieth (20th) day of the month. Notice provided after the twentieth (20th) day of the month will be effective as of the first (1st) day of the next month.

13. Nothing in the Agreement shall be deemed to alter or modify any rate schedule, charge, or condition of service established from time to time by the Commission for electric service provided by the Company. All such rates and charges from the Customer's applicable rate schedule shall apply and remain, subject to change in accordance with Commission rules.

Order No. 35560; Filed June 29, 2018,
Transmittal Letter dated July 10, 2018.

Rule No. 26 - Continued
COMMUNITY-BASED RENEWABLE ENERGY PROGRAM
PHASE 1

C. CREDIT RATE

1. Subscribers served under this tariff who also receive energy from the Company shall be billed monthly for the energy supplied by the Company, in accordance with the Company's Rule No. 8, the applicable rate schedule, and Company's rules filed with the Commission.

2. All rates, terms, and conditions from the applicable rate schedule will apply.

3. The applicable credit rates ("Credit Rates") for CBRE Phase 1 subscriptions purchased or leased by Subscribers for each rate schedule shall be as follows:

   Energy Credit Rates for Each Applicable Rate Schedule:

Schedule	MAUI	LANAI	MOLOKAI	
R, TOU-RI, TOU-R, TOU-EV	16.50	26.00	22.50	cents per kWh daily
G, TOU-G	16.50	26.00	22.50	cents per kWh daily
J, TOU-J, U, SS, EV-F	16.50	26.00	22.50	cents per kWh daily
P, TOU-P	16.50	26.00	22.50	cents per kWh daily
F	16.50	26.00	22.50	cents per kWh daily

   Credit Rates shall be fixed at the above levels for the term of the Agreement, which for Phase 1 shall be the CBRE Phase 1 Facility life. Thereafter, the applicable energy credit rates shall be subject to modification by the Commission.

Order No. 35560; Filed June 29, 2018,
Transmittal Letter dated July 10, 2018.

Rule No. 26 - Continued
COMMUNITY-BASED RENEWABLE ENERGY PROGRAM
PHASE 1

4. The monthly CBRE participation credit for each Subscriber shall begin to accrue on the first day of the month in which Subscriber completes the purchase or lease of Subscriber's subscription into a CBRE Phase 1 Facility, provided that Subscriber Organization promptly notifies the Administrator of Subscriber's subscription no later than the twentieth (20th) day of the month in which Subscriber subscribed into the CBRE Phase 1 Facility. Subscriber's monthly CBRE participation credit shall begin accruing on the first (1st) day of the next month if the notice by the Subscriber Organization is made after the twentieth (20th) day of the month. The amount of the Subscriber's monthly CBRE participation credit shall be equal to the Subscriber's interest in the energy output of the Facility, multiplied by the Facility's actual energy output, multiplied by the applicable Credit Rate per kilowatt-hour ("kWh").

5. A Subscriber's monthly CBRE participation credit shall be applied to offset eligible charges on the Subscriber's electric bill no earlier than the 15th day of the following month but no later than two billing cycles. Subscribers will see eligible credits on a future bill depending on the day their meter is read. Eligible charges on the Subscriber's electric bill shall be all light and power charges.

6. The Subscriber's electric bill cannot be reduced below the sum of the customer charge, the Green Infrastructure Fee, and any other per-customer charge for the customer's applicable rate schedule or the minimum bill applicable in the underlying tariff, whichever is greater.

Order No. 35560; Filed June 29, 2018,
Transmittal Letter dated July 10, 2018.

Rule No. 26 - Continued
COMMUNITY-BASED RENEWABLE ENERGY PROGRAM
PHASE 1

7. If the Subscriber's monthly CBRE participation credit exceeds the eligible charges, the value of excess credits shall be carried over to the next billing period(s) within the current 12-month period, as a CBRE participation credit and applied to the Subscriber's electric bill(s) subject to paragraph 5 and 6 above. Reconciliation will be made at the end of every 12-month period by applying the Subscriber's remaining CBRE participation credit to the Subscriber's remaining eligible charges within the 12-month period. Any CBRE participation credit that remains unused at the end of each 12-month period shall be extinguished.

8. If the Subscriber terminates its CBRE service prior to the end of any 12-month period, the Company shall reconcile the remaining CBRE participation credit to remaining eligible charges at the end of the monthly billing period when service was terminated, similar to the reconciliation that would have been performed at the end of the normal 12-month period. Any CBRE participation credit that remains unused shall be extinguished.

Rule No. 26 - Continued
COMMUNITY-BASED RENEWABLE ENERGY PROGRAM
PHASE 1

D. SUBSCRIBER ORGANIZATION PARTICIPATION

1. A CBRE Phase 1 Facility may be developed by an approved Subscriber Organization. An applicant seeking to become an approved Subscriber Organization shall be referred to as an "Applicant" until approved.

2. Prior to developing a Facility, an Applicant shall submit a completed Application to the Company, which shall provide the following in order to be considered a complete Application:

   a. A one-time Application processing fee of $1,000 per application, 75% of which shall be refunded if the Applicant submits a CBRE Phase 1 Facility less than or equal to 250 kW AC and is not selected to receive CBRE Program Phase 1 capacity;

   b. Applicant company name, contact information, and address, and indicate their role (e.g., Subscriber Organization, owner, or operator);

   c. Applicant contact person name, contact information, and address;

   d. Entity name, contact information, address, and identity role of the Subscriber Organization if approved; if entities other than the Subscriber Organization will act as either owner or operator of the CBRE Facility, name, role identification, contact information, and address shall be provided for those other entities;

   e. Proposed CBRE Phase 1 Facility name, address, and estimated completion date;

   f. CBRE Phase 1 Facility system nameplate direct current (DC) capacity, AC output (inverter nameplate), mount location, tracker type, azimuth, and tilt.

Rule No. 26 - Continued
COMMUNITY-BASED RENEWABLE ENERGY PROGRAM
PHASE 1

g. If the Applicant is a foreign entity, confirmation from the State of Hawai‘i Department of Commerce and Consumer Affairs that the Applicant is currently authorized to do business in the State of Hawai‘i as of the date of submittal.

h. A Certificate of Good Standing for the Applicant obtained from the State of Hawai‘i Department of Commerce and Consumer Affairs dated no earlier than thirty (30) days prior to submittal by the Applicant.

i. Demonstration of capability to deliver. Applicant, its affiliated companies, partners, and/or contractors and consultants on the Applicant's team, shall provide written documentation that demonstrates experience in the development and operation of at least one renewable energy generation facility similar in size, scope, and structure to the Facility being proposed. The independent observer ("IO") may waive this provision for Applicants proposing systems under 250 kW AC, that meet specific criteria, such as 501(c)(3) organizations, Customers choosing to collectively develop systems for their own benefit as Subscribers, organizations focused on delivering services to LMI ratepayers, or others, as determined appropriate by the IO.

Applications shall be accepted beginning on the effective date of the tariff. Applications deemed complete (providing all information required under Section D.2 above) shall receive a timestamp which shall serve as the date of the Applicant's application for award and queue purposes.

3. Phase 1 CBRE Program capacity shall be awarded on a first-come, first-served basis based on the timestamp of a completed Application. If an Applicant submits an Application that does not contain all the required items listed in Section D.2 above, the Application shall be deemed incomplete and the timestamp for the completed Application shall be when the last item(s) is/are received from the Applicant that renders the Application complete under Section D.2, with the exception of Section D.2.a, regarding Application processing fee payment and Section D.2.i, regarding the "waiver" from the IO. If the application fee or the waiver is the only item missing and it is received within fifteen (15) days from the date of submission, the time stamp will be the date the Application was submitted electronically. Partially completed Applications will be deemed abandoned if all required items are not submitted so as to render the Application complete after sixty (60) days.

Order No. 35560; Filed June 29, 2018,
Transmittal Letter dated July 10, 2018.

Rule No. 26 - Continued
COMMUNITY-BASED RENEWABLE ENERGY PROGRAM
PHASE 1

Phase 1 Applications for CBRE Phase 1 Facilities shall be conditionally accepted subject to verification of the requirements in Section D.2 above. Upon successfully meeting the CBRE requirements, the Facility shall be accepted into Phase 1 of the CBRE Program if unused capacity is available to accept the Applicant's project. If the Applicant's proposed project size exceeds the available capacity remaining for Phase 1, the Applicant shall have the one-time option to reduce the proposed size of its Facility to the remaining capacity available. If the Applicant does not exercise this option, the Applicant's application shall be placed in the Phase 1 queue described below. Facility selection shall continue until the capacity allocation for Phase 1 on each island is fully allocated. If a Facility drops out after selection for inclusion in Phase 1 the allocation for such Facility shall be added back to the capacity allocation for the respective island and the first complete Application for a CBRE Phase 1 Facility in the queue for that island (with the one-time option described above) shall be offered the opportunity to become a CBRE Phase 1 Subscriber Organization. The Company shall continue to offer Subscriber Organization status to Applicants in the applicable queue until the capacity allocation made available is filled. Concurrently and after acceptance into Phase 1, CBRE Phase 1 Facilities shall undergo completeness and technical review under Company's Rule 14H for interconnection.

4. After any applicable capacity limitations are met in Phase 1, excess completed Applications for CBRE Phase 1 Facilities in that category shall be placed in a queue to replace any Phase 1 capacity dropouts. Phase 1 will terminate one (1) year after the commencement of Phase 2 of the CBRE Program ("Phase 2"). If, at the conclusion of Phase 1, there remains excess capacity and no Applicants in the queue desiring to use such capacity, the remaining unused capacity shall be extinguished or added to the available capacity in Phase 2, as directed by the Commission. The queue for Phase 1 shall be terminated as well and any subsequent failure of a CBRE Phase 1 Facility shall not be replaced.

Order No. 35560; Filed June 29, 2018,
Transmittal Letter dated July 10, 2018.

Rule No. 26 - Continued
COMMUNITY-BASED RENEWABLE ENERGY PROGRAM
PHASE 1

5. Applications for queued CBRE Phase 1 Facilities may be resubmitted at no additional cost in Phase 2.

6. Additional fees and deposit required from Subscriber Organizations in addition to the Application processing fee shall include:

   a. Any applicable interconnection fees, costs and expenses necessary to interconnect the CBRE Phase 1 Facility to the system grid; and
   b. A $5/kW AC Program Administration Fee, assessed annually commencing on the first day of the month immediately succeeding the date of initial commercial operations for any CBRE Phase 1 Facility.

7. "Unsubscribed energy" is CBRE Phase 1 Facility output that is not associated with any Subscriber subscription and therefore not allocated to a Subscriber. The following shall be effective six months from the date of initial commercial operations. Compensation for unsubscribed energy shall be as follows:

   a. For any Facility with more than 15 percent unsubscribed energy, the compensation for the Unsubscribed energy for that month shall be discounted by the percentage of energy that is unsubscribed.
   b. Unsubscribed capacity shall be calculated at the end of the month and applied retroactively to the CBRE Phase 1 Facility when calculating that month's prior unsubscribed credits.

Order No. 35560; Filed June 29, 2018,
Transmittal Letter dated July 10, 2018.

Rule No. 26 - Continued
COMMUNITY-BASED RENEWABLE ENERGY PROGRAM
PHASE 1

8. A Subscriber Organization shall be required to have a minimum of four individual Subscribers per CBRE Phase 1 Facility at all times. For a period of six (6) months following commercial operations, the Subscriber Organization shall incur no penalty if it should fall below this minimum number of Subscribers. Effective after six (6) months of commercial operations, the following shall be placed into effect for the remainder of the term of the Subscriber Organization's Facility:

    a. For any Facility which does not have the minimum four (4) individual Subscribers for six (6) consecutive months, , the Subscriber Organization's compensation for energy delivered in the next month shall be reduced by 50%.
    b. If the Subscriber Organization's unsubscribed energy is also greater than 15% in such month, the compensation for energy delivered in that month shall be reduced by a percentage equal to the higher of (1) 50% or (2) the percentage of unsubscribed energy for that month.

9. Subscriber Organizations notification of a Subscriber's purchase or lease of a subscription shall be Subscriber Organization's representation and warranty that the Subscriber Organization has executed a Subscriber Agreement with the Subscriber and provided a completed Disclosure Checklist executed by the Subscriber that is attached to the Subscriber Agreement for such Subscriber. The Administrator, IO or the Commission may request copies of all Subscriber Agreements and/or Disclosure Checklists completed by the Subscriber Organization with its Subscribers at any time during the term of the Subscriber Organization's Facility.

10. The Company may, but shall not be required to, confirm that the Subscribers submitted by the Subscriber Organization are qualified pursuant to Section A above for participation in the CBRE Phase 1 Program. If any Subscribers are not qualified or are not purchasing an interest within the allowed limits set out in Section B above, then the Subscribers shall not be accepted into Phase 1 of the CBRE Program and the Company shall notify the Subscriber Organization of all disqualified Subscribers and remove them from the roster of that Subscriber Organization's list of Subscribers.

Order No. 35560; Filed June 29, 2018,
Transmittal Letter dated July 10, 2018.

Rule No. 26 - Continued
COMMUNITY-BASED RENEWABLE ENERGY PROGRAM
PHASE 1

E. CAPACITY ALLOCATION

1. Phase 1 capacity allocation is for "Standard" CBRE Facilities, which are defined as all CBRE Facilities that are developed, owned, or operated by a third party.

2. Only solar photovoltaic facilities shall be allowed in Phase 1.

3. The capacity allocation in Phase 1 shall be 1.0 MW for Maui Electric-Maui Division, 0.5 MW for Maui Electric-Moloka‘i Division, and 0.5 MW for Maui Electric-Lana‘i Division.

Order No. 35560; Filed June 29, 2018,
Transmittal Letter dated July 10, 2018.

Rule No. 26 - Continued
COMMUNITY-BASED RENEWABLE ENERGY PROGRAM
PHASE 1

F. COMMUNICATIONS AND CONTROLLABILITY

1. The Facility shall include a telemetry and control interface which allows the Company to remotely measure, monitor, evaluate and verify technical compliance, CBRE Facility performance, and power quality and, if necessary, control the CBRE Facility ("Communication and Controls"). The acceptable method(s) of implementing the Communication and Control requirements will be specified by the Company. Monitoring will be performed by system dispatchers or operators at the Company's control center.

2. For CBRE Facilities with an aggregate capacity greater than or equal to 250 kW, computerized supervisory control shall be required, and include monitoring of: (a) gross generation by the CBRE Facility; (b) feedback of Watts, Vars, WattHours, current and voltage; (c) Vars furnished by the utility; (d) status of the interrupting device; and (e) if available, monitoring of: frequency (Hertz). In addition, the supervisory control will allow the utility to trip the interrupting device pursuant to the terms of an interconnection agreement ("Interconnection Agreement") between the Subscriber Organization and the Company, attached hereto as Appendix III.

3. For CBRE Facilities with an aggregate capacity less than 250 kW shall comply with the Communication and Control requirements stated in Section F.2 above, or in the alternative, upon Company approval, may implement Communication and Control through cellular or comparable technology, and include monitoring of: (a) gross generation by the CBRE Facility; (b) feedback of Watts, Vars, WattHours, current and voltage; and (c) if available, monitoring of: connection status of the CBRE Facility, frequency (Hertz). In addition, the cellular or comparable technology control will allow the utility to trip the CBRE Facility pursuant to the terms of the Interconnection Agreement.

Rule No. 26 - Continued
COMMUNITY-BASED RENEWABLE ENERGY PROGRAM
PHASE 1

G. INTERCONNECTION

1. All CBRE Phase 1 Facilities shall be designed to interconnect and operate in parallel with the Company's system without adversely affecting the operations of its customers and without presenting safety hazards to the Company's or other customers' personnel. Such Facilities and the interconnection systems shall be in compliance with all applicable safety and performance standards of the National Electric Code (NEC), the Institute of Electrical and Electronics Engineers (IEEE), the Company's interconnection standards and procedures provided in Rule No. 14H, and Rule No. 19, as amended from time to time, and also subject to any other requirements as may be specified in the Interconnection Agreement or the standard form contract ("Standard Form Contract" or "SFC"), attached here to as Appendix IV).

2. CBRE Phase 1 Facilities shall have priority for available hosting capacity on a particular circuit over projects planned for that particular circuit that have not commenced its technical review process.

3. CBRE Phase 1 Facilities interconnected at the Distribution Level[1] that are selected shall follow the applicable Rule No. 14H interconnection process at the time of interconnection.

4. CBRE Phase 1 Facilities interconnecting at the Sub-Transmission and Transmission levels shall follow the interconnection process applicable to their Facilities at the time of interconnection.

5. Each CBRE Phase 1 Facility shall have one interconnection point and suitable metering equipment to measure the energy output and data required for calculation of Compensable Curtailment (as defined in the SFC) of the CBRE Phase 1 Facility.

[1] Distribution system (Level) is defined as interconnection to electrical wires, equipment, and other facilities at the distribution voltage levels (such as 25kV (Hawaiian Electric only), 12kV, or 4kV) owned or provided by the Company, through which the utility provides electrical service to its customers.

Order No. 35560; Filed June 29, 2018,
Transmittal Letter dated July 10, 2018.

Rule No. 26 - Continued
COMMUNITY-BASED RENEWABLE ENERGY PROGRAM
PHASE 1

H. MICROGRIDS

1. Capitalized terms used in this section are as defined in Rule No. XX, Microgrid Services Tariff.

2. During Grid-Connected Mode, the Microgrid will be operated in parallel with the Company's System.

3. A Customer may operate its Generating Facility as part of a Customer Microgrid or be a participant in a Hybrid Microgrid.

4. A Customer who intends to operate its Generating Facility within a Customer Microgrid, or as a participant in a Hybrid Microgrid, shall notify the Company in its application through the Customer Interconnection Tool.

5. A Customer who operates its Generating Facility as part of a Microgrid after obtaining interconnection approval from the Company shall update its application through the Customer Interconnection Tool. Such notification and revision shall satisfy the Customer's notice requirements set forth in Tariff Rule 3B (Change in Customer's Equipment or Operations).

6. Customer Microgrids and Hybrid Microgrid Participants shall comply with the requirements of Rule No.XX, Microgrid Services Tariff, including Section H, Microgrid Operation.

~~5.~~

Rule No. 26 - Continued
COMMUNITY-BASED RENEWABLE ENERGY PROGRAM
PHASE 1

~~H.~~I. CBRE PROGRAM FACILITY SUBSCRIBER ORGANIZATION AGREEMENTS

1. Successful Subscriber Organizations (completed application process and is offered CBRE Program capacity) shall execute the SFC and Interconnection Agreement with the Company.

2. The SFC and Interconnection Agreement shall remain in effect for the Term set forth therein.

3. Subscriber Organizations shall pay fees as described in Sections D.2 and D.6 above.

4. Subscriber Organizations shall ensure CBRE Facilities are built within the specific number of months as specified in the SFC.

5. Subscriber Organizations are responsible for their own operation and maintenance of their facility to ensure the facility meets agreed performance warranties, per terms and conditions set forth in the Interconnection Agreement and Tariff Rule 14H.

6. Electric energy delivered to the Subscriber Organization by the Company shall be billed under the Company's applicable rate schedule. Electric energy delivered to the Subscriber Organization by the Company shall be metered separately from the electric energy delivered by the Subscriber Organization to the Company, either by use of multiple meters or a meter capable of separately recording the inflow and outflow of electricity. Electric energy generated by the CBRE Phase 1 Facility shall not be used to offset electric energy needs of the Facility itself so as to maximize the output of the Facility and the corresponding bill credits of the Subscribers to such Facility. Subscriber Organization will calculate and will be responsible for the accuracy of the Subscriber's monthly credit. The Subscriber's monthly credit will be provided by the Subscriber Organization to the Company in dollars, per Section C.4, no later than seven days after the end of each calendar month.

Order No. 35560; Filed June 29, 2018,
Transmittal Letter dated July 10, 2018.

Rule No. 26 - Continued
COMMUNITY-BASED RENEWABLE ENERGY PROGRAM
PHASE 1

~~I.~~J. ALLOWED CBRE FACILITY DEVELOPMENT TIMEFRAME

1. Pre-Execution Requirements: Prior to execution of the SFC and Interconnection Agreement, CBRE Facilities must comply with the requirements of this CBRE Tariff and prove that the CBRE Facility is "shovel-ready'" and actively progressing towards completion. Company shall issue a written notice to the Subscriber Organization that will list all documentation that is required from the Subscriber Organization and/or any action that must be taken by the Subscriber Organization in order to comply with the CBRE Tariff. Unless otherwise expressly specified in an existing tariff, the Subscriber Organization shall have fifteen (15) business days from the date of such notice to submit the required documentation and/or provide evidence that the required action has been completed.

2. Commercial Operations Date: CBRE Phase 1 Facilities must be placed into operation within the timeframe specified in the SFC and measured from the Execution Date of the SFC. After completion of required testing by the Company, a Subscriber Organization will be permitted to commence commercial operations as of the first (1st) day of the month immediately following the Company's acceptance of the CBRE Phase 1 Facility.

Order No. 35560; Filed June 29, 2018,
Transmittal Letter dated July 10, 2018.

Rule No. 26 - Continued
COMMUNITY-BASED RENEWABLE ENERGY PROGRAM
PHASE 1

3. Removal of CBRE Facility from CBRE Program and Termination:

   a. Failure To Meet Pre-Execution Requirements or Post-Execution Requirements: Should a Subscriber Organization fail to comply with pre-execution (before execution of the Interconnection Agreement or SFC) requirements, the Subscriber Organization's Facility shall be subject to removal from the CBRE Program. Should a Subscriber Organization fail to meet post-execution requirements specified in the SFC or the Interconnection Agreement, the SFC and the Interconnection Agreement shall be subject to termination in accordance with the terms of the SFC, the Interconnection Agreement (as applicable) and this tariff rule. Company, with concurrence of the IO, shall notify the Subscriber Organization when a requirement has been missed or defaulted upon (after any applicable cure period) in accordance with the notice provisions under the SFC or the Interconnection Agreement. The Subscriber Organization shall have five (5) business days to provide proof that the Company and IO's determination was in error. If no response is received or if the proof is deemed insufficient by the Company and IO, the Subscriber Organization's Facility in question may be removed from the CBRE Program or the SFC and Interconnection Agreement may be terminated, as may be applicable, with notice to the Subscriber Organization, which termination shall be effective no earlier than thirty (30) days after such notice. Company shall provide a copy of such notice of termination to all Subscribers of such facility, the IO and the PUC. Concurrence of both the Company and the IO shall be required before a CBRE Facility can be removed from the CBRE Program or an SFC and Interconnection Agreement can be terminated. Upon removal of a CBRE Facility from the CBRE Program or termination of an SFC and Interconnection Agreement, any fees and security deposits paid to the Company by the Subscriber Organization for such Facility shall be forfeited.
   b. Failure To Meet Commercial Operation Date: Should a Subscriber Organization fail to place a CBRE Phase 1 Facility into operation within the timeframe specified in the SFC, the SFC (and Interconnection Agreement) may be terminated and any fees and security deposits paid to the Company by the Subscriber Organization will be forfeited all as specified in the SFC. If terminated by the Company, Subscriber Organization shall not retain its capacity and/or queue space in the CBRE Program once terminated. If the Subscriber Organization subsequently wishes to complete its CBRE Phase 1 Facility, the Subscriber Organization will be required to re-apply to be a Subscriber Organization under these tariff rules, subject to all requirements herein, including capacity limitations and payment of fees.

Order No. 35560; Filed June 29, 2018,
Transmittal Letter dated July 10, 2018.

Rule No. 26 - Continued
COMMUNITY-BASED RENEWABLE ENERGY PROGRAM
PHASE 1

4. Extensions For Good Cause: When extraordinary circumstances exist that may cause a Subscriber Organization to miss a pre-execution requirement, post-execution milestone or delay the completion of a CBRE Facility within the allowed Facility development timeframe, the Subscriber Organization may request an extension, not to exceed 90 days, of the applicable deadline. All requests for extensions must be made at the time of the event that necessitated the need for an extension. The Company and the IO may each unilaterally approve a request for an extension. A request for an extension may only be rejected by the joint approval of the Company and IO. To the extent that any delays are caused by the Company, a day-for-day extension of time for the period of the delay shall be granted to the affected CBRE Facility to comply with the applicable deadline.

5. Commission Oversight. The Commission shall have ultimate oversight over the CBRE Phase 1 Program. Material disputes unresolved after consultation with the IO may be presented to the Commission for review and the Commission may issue guidance and/or orders to resolve such disputes consistent with these tariff rules.

RULE NO. 27

Net Energy Metering Plus

A. ELIGIBLE CUSTOMER-GENERATOR

The Net Energy Metering Plus ("NEM+") Program is available to existing Eligible Customer- Generators under the Company's Net Energy Metering program (as described in Rule No. 18), that wish to add a non-exporting renewable energy system ("Non-Export Facility" or "Generating Facility") with or without an energy storage system or a standalone energy storage system, and where the following requirements are met:

1. The Non-Export Facility is located on the same premises as the Eligible Customer- Generator's existing Net Energy Metering generating facility ("NEM Facility").

2. The Non-Export Facility is sized and designed such that all of the Non-Export Facility's output is intended to serve on-site load at the Eligible Customer-Generator's premises.

3. The existing NEM Facility shall not be materially changed (e.g., increase in photovoltaic module wattage, additional photovoltaic modules, modified operation of the facility) without the prior written consent of the Company.

4. The existing NEM Facility will not export more than the original approved capacity of such NEM Facility.

5. The Non-Export Facility shall not export electric energy to the Company's electric system, except when permitted to provide Grid Support as set forth in Appendix II attached hereto.

6. The capacity of a Non-Export Facility that is comprised of more than a stand-alone energy storage system (e.g., Customer Self-Supply System) must be less than 100 kW (Capacity is defined as the sum of all inverter string capacities. The inverter string capacity is the lesser of the nominal inverter AC capacity or the nominal DC capacity for that inverter. The DC capacity is the sum of all generation (including energy storage systems) capacities connected to that inverter.).

7. The Non-Export Facility is in conformance with the Company's interconnection requirements provided in Rule No. 14, Paragraph H.

8. The Non-Export Facility shall be designed and configured to meet the Technical Specifications set forth in Appendix II attached hereto.

B. INTERCONNECTION AGREEMENT AND REQUIREMENTS

1. Eligible Customer-Generators shall complete and sign an application for service and a Standard Interconnection Agreement For Net Energy Metering Plus provided as Appendix I of this Rule ("Interconnection Agreement"), to receive NEM+ service, which shall not be effective until approved and executed by the Company. Where the Eligible Customer-Generator is not the person or entity in whose name electric service is rendered for the Eligible Customer-Generator's premises where the Generating Facility is located, i.e. where a landlord-tenant relationship exists, only the Eligible Customer- Generator shall be required to complete and sign the application for service and the Interconnection Agreement.

2. The Eligible Customer-Generator's existing Net Energy Metering Facility, to the extent materially changed, Non-Export Facility and associated interconnection systems must be in compliance with all applicable safety and performance standards of the National Electric Code (NEC), the Institute of Electrical and Electronic Engineers (IEEE), accredited testing laboratories such as Underwriters Laboratories (UL), the Company's interconnection requirements provided in Rule No. 14. Section H, Appendix I, and is subject to any other requirements provided in the Interconnection Agreement.

C. METERING AND BILLING

1. The Company, at its expense, may install advanced meter(s) to record the flow of electric power in each direction. The Eligible Customer-Generator shall, at its expense, provide, install and maintain all conductors, service switches, fuses, meter sockets, meter instrument transformer housing and mountings, switchboard meter test buses, meter panels and similar devices required for service connection and meter installations on the customer's premises in accordance with the Company's Rule No. 14, Section A.2.

2. Eligible Customer-Generators served under this tariff who also receive energy from the Company shall be billed monthly for the energy supplied by the Company, in accordance with the Company's Rule No. 8, the applicable rate schedule, and the Company's rules filed with the Commission.

3. Eligible Customer-Generators shall be billed for the kilowatt-hours supplied by the Company, and receive monetary credits for the kilowatt-hours produced by the Eligible Customer-Generator through its existing NEM Facility (together with any inadvertent export of the Non-Export Facility), in a manner consistent with the billing provisions of the Company's Rule No. 18, Section C.

4. All rates, terms, and conditions from the applicable rate schedule will apply.

5. Company's agreement to accept inadvertently exported electric power from the Generating Facility under this tariff is solely an accommodation. Neither this tariff nor the Interconnection Agreement provide for, require or otherwise obligate Company to measure, purchase, transmit, distribute, or store any electric power that may be delivered to Company's distribution system by Eligible Customer-Generator.

D. INTERCONNECTION PROCESS

1. Eligible Customer-Generator requests to interconnect and operate a Non-Export Facility in parallel with the Company's electric system will be processed in accordance with the procedures in the Interconnection Process Overview provided in Appendix III of Rule 14, Paragraph H. Non-Export Facilities comprised of more than a standalone energy storage system, e.g., battery storage, and that meet the Technical Specifications stated in Appendix II to this Rule shall qualify for expedited interconnection subject to the terms and conditions set forth in Company Rule 14, Section H, Appendix III. Non-Export Facilities comprised solely of an energy storage system shall not require an interconnection review by the Company.

2. Under no circumstances shall a Customer-Generator interconnect and operate a Non-Export Facility in parallel with the Company's electric system without prior written approval by the Company in the form of a fully executed Interconnection Agreement provided in Appendix I.

E. MICROGRIDS

1. Capitalized terms used in this section are as defined in Rule No. XX, Microgrid Services Tariff.

2. During Grid-Connected Mode, the Microgrid will be operated in parallel with the Company's System.

3. A Customer may operate its Generating Facility as part of a Customer Microgrid or be a participant in a Hybrid Microgrid.

4. A Customer who intends to operate its Generating Facility within a Customer Microgrid, or as a participant in a Hybrid Microgrid, shall notify the Company in its application through the Customer Interconnection Tool.

5. A Customer who operates its Generating Facility as part of a Microgrid after obtaining interconnection approval from the Company shall update its application through the Customer Interconnection Tool. Such notification and revision shall satisfy the Customer's notice requirements set forth in Tariff Rule 3B (Change in Customer's Equipment or Operations).

6. Customer Microgrids and Hybrid Microgrid Participants shall comply with the requirements of Rule No.XX, Microgrid Services Tariff,

Order No. 35746 Dated October 12, 2018, Docket No. 2014-0192
Transmittal Letter Dated October 22, 2018

including Section H, Microgrid Operation.

F. NON-APPLICABILITY OF NEM RULES AND STATUTE

The Net Energy Metering program was closed to new applications by the Hawai‘i Public Utilities Commission as of October 12, 2015 via Decision and Order No. 33258 in Docket No. 2014-0192. While the NEM+ program is available to existing NEM customers, participation under the NEM+ program and the terms of the Standard Interconnection Agreement For NEM+ provided as Appendix I of this Rule are not governed by Rule No. 18 (Net Energy Metering) or the provisions of Hawaii Revised Statutes, Chapter 269, Part VI, relating to Net Energy Metering, except to the limited extent expressly provided in Section C.3 of this Rule. Under no circumstances shall a Customer-Generator increase the name-plate size of its existing NEM Facility under this program.

G. APPLICATION CHARGE

Each Eligible Customer-Generator submitting an application for service under this tariff shall pay a one-time application charge of $50.00 unless such application is submitted electronically via the Company’s online Customer Interconnection Tool, in which case no application charge will be assessed.

Service List

DEAN NISHINA (Dean.K.Nishina@dcca.hawaii.gov)
Executive Director
Division of Consumer Advocacy
Dept. of Commerce & Consumer Affairs
P.O. Box 541
Honolulu, HI 96809

CHRIS DEBONE (chris@hawaiienergyconnection.com)
President
Distributed Energy Resources Council
99-1350 Koaha Place
Aiea, HI 96701

WILLIAM J. ROLSTON (willenergyisland@gmail.com)
Director – Energy Island
73-4101 Lapaau Place
Kailua Kona, HI 96740-8424

CHRISTOPHER B. BERENDT (christopher.berendt@faegredrinker.com)
Co-Counsel
Drinker Biddle & Reath LLP
1500 K Street, N.W.
Washington, DC 20005-1209

Counsel for the Microgrid Resources Coalition

GERALD A. SUMIDA (gsumida@carlsmith.com)
ARISMA A. MULLER (amuller@carlsmith.com)
Carlsmith Ball LLP
ASB Tower, Suite 2100
1001 Bishop Street
Honolulu, HI 96813

Attorneys for Ulupono Initiative